Water-Cooled Liquid Chillers

PRO-DIALOG

AQUAFORCE

EUROVENT CERTIFIED PERFORMANCE
www.eurovent-certification.com

www.eurovent-certification.com
www.certiflash.com

LLOYD'S REGISTER QUALITY ASSURANCE
ISO9001 · ISO14001

Quality and Environment Management Systems Approval

30XW- 30XWH

Nominal cooling capacity 278-1756 kW
Nominal heating capacity 322-1989 kW

The 30XW liquid chillers are the premium solution for industrial and commercial applications where installers, consultants and building owners require optimal performances and maximum quality.

The 30XW liquid chillers are designed to meet current and future requirements in terms of energy efficiency, flexibility of use and compactness. They use the most reliable technologies available today:
- Twin-rotor screw compressors with a variable capacity valve
- Single refrigerant R-134a
- Pro-Dialog control system
- Flooded heat exchangers that are mechanically cleanable

To meet to all environmental and economic requirements, the 30XW is available in two efficiency classes:
- Standard-efficiency 30XW units that offer an optimised balance of technical and economical aspects, while at the same time boasting superior energy efficiency.
- High-efficiency 30XW-P units that offer unequalled energy efficiency to satisfy the most stringent demands of building owners wanting to reduce operating costs to the minimum.

The 30XW Aquaforce range is also split into two versions:
- 30XW for air conditioning and refrigeration applications
- 30XWH for heating applications

These two versions provide the following performances:
- High heating temperature, allowing the 30XWH Aquaforce to supply water with a condenser leaving water temperature of +63°C (option 150)
- Low temperature, allowing the 30XW Aquaforce to operate with an evaporator leaving glycol temperature down to -6°C (option 5) or -12°C (option 6).

Compact, accessible unit - side view - sizes below 1162

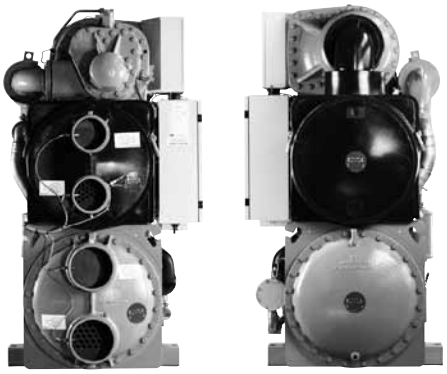

Contents

Features 1-4
Options 5
Accessories 5
Physical data, standard-efficiency units 6
Physical data, high-efficiency units 7
Electrical data 8
Physical data, standard-efficiency units with high condensing temperatures (option 150) 9
Physical data, high-efficiency units with high condensing temperatures (option 150) 10
Electrical data, units with high condensing temperatures (option 150) 11
Physical data, low-temperature units 12
Electrical data, low-temperature units 12
Part-load performances 13
Sound spectrum 14-15
Operating limits and operating ranges 16
Evaporator pressure drop curves 17
Condenser pressure drop curves 17
Dimensions/clearances 18-20
Cooling capacities in accordance with EN14511-3 : 2011, standard-efficiency 30XW-- units 21-22
Cooling capacities, gross performances, standard-efficiency 30XW-- units 23-24
Heating capacities in accordance with EN14511-3 : 2011, standard-efficiency 30XWH- units 25-26
Heating capacities, gross performances, standard-efficiency 30XWH- units 27-28
Cooling capacities in accordance with EN14511-3 : 2011, standard-efficiency 30XW-- units with option 150 29-30
Cooling capacities, gross performances, standard-efficiency 30XW-- units with option 150 31-32
Heating capacities in accordance with EN14511-3 : 2011, standard-efficiency 30XWH- units with option 150 33-34
Heating capacities, gross performances, standard-efficiency 30XWH- units with option 150 35-36
Cooling capacities in accordance with EN14511-3 : 2011, high-efficiency 30XW-P units 29-30
Cooling capacities, gross performances, high-efficiency 30XW-P units 31-32
Heating capacities in accordance with EN14511-3 : 2011, high-efficiency 30XWHP units 33-34
Heating capacities, gross performances, high-efficiency 30XWHP units 35-36
Cooling capacities in accordance with EN14511-3 : 2011, high-efficiency 30XW-P units with option 150 37-38
Cooling capacities, gross performances, high-efficiency 30XW-P units with option 150 39-40
Heating capacities in accordance with EN14511-3 : 2011, high-efficiency 30XWHP units with option 150 41-42
Heating capacities, gross performances, high-efficiency 30XWHP units with option 150 43-44

Features and advantages

Superior operating economy

- Full load and part load energy efficiency that surpasses the industry average:
  - Eurovent energy efficiency class “A”
  - EER of up to 6.15 kW/kW (30XW-P)
  - ESEER of up to 8.0 kW/kW (30XW-P)
  - New twin-rotor screw compressor equipped with a high-efficiency motor and a variable capacity valve that permits exact matching of the cooling capacity to the load.
  - Flooded multi-pipe evaporator and condenser for increased heat exchange efficiency.
  - Electronic expansion device permitting operation at a lower condensing pressure and improved utilisation of the evaporator heat exchange surface.
  - Economizer system with electronic expansion device for increased cooling capacity (30XW-P).

Low operating sound levels

- Compressors
  - Silencers on the discharge line.
  - Silencers on the economiser return line.
  - Acoustic insulation on the components that are most subjected to radiated noise.

Easy and fast installation

- Compact design
  - The 30XW units are designed to offer the most compact dimensions on the market.
  - With a width of approximately 1 m up to 1500 kW the units can pass through standard door openings and only require minimum floor space in the plant room.
- Simplified electrical connections
  - Main disconnect switch with high trip capacity
  - Transformer to supply the integrated control circuit (400/24 V)
- Simplified hydronic connections
  - Victaulic connections on the evaporator and condenser
  - Practical reference marks for entering and leaving water connections
  - Possibility to reverse the heat exchanger water inlet and outlet at the factory
  - Possibilty to modify the number of heat exchanger passes
- Fast commissioning
  - Systematic factory operation test before shipment
  - Quick-test function for step-by-step verification of the instruments, expansion devices and compressors

Environmental care

- R-134a refrigerant
  - HFC refrigerant with zero ozone depletion potential
- Leak-tight refrigerant circuit
  - Reduction of leaks as no capillary tubes and flare connections are used
  - Verification of pressure transducers and temperature sensors without transferring refrigerant charge
  - Discharge line shut-off valve and liquid line service valve for simplified maintenance.

Absolute reliability

- Screw compressors
  - Industrial-type screw compressors with oversized bearings and motor cooled by suction gas.
  - All compressor components are easily accessible on site minimising down-time.
  - Protection increased by an electronic board.
- Refrigerant circuit
  - Two independent refrigerant circuits (from 1000 kW upwards); the second one automatically takes over, if the first one develops a fault, maintaining partial cooling under all circumstances.
- Evaporator
  - Electronic paddle-free flow switch. Auto-setting according to cooler size and fluid type.
- Auto-adaptive control
  - Control algorithm prevents excessive compressor cycling (Carrier patent)
  - Automatic compressor unloading in case of abnormally high condensing pressure.
- Exceptional endurance tests
  - Partnerships with specialised laboratories and use of limit simulation tools (finite element calculation) for the design of critical components.
  - Transport simulation test in the laboratory on a vibrating table and then on an endurance circuit (based on a military standard).

Pro-Dialog control

- Pro-Dialog combines intelligence with operating simplicity. The control constantly monitors all machine parameters and precisely manages the operation of compressors, electronic expansion devices and of the evaporator water pump for optimum energy efficiency.
- Energy management
  - Internal time schedule clock: controls chiller on/off times and operation at a second setpoint
  - Setpoint reset based on the return water temperature
  - Master/slave control of two chillers operating in parallel with operating time equalisation and automatic change-over in case of a unit fault.
- Ease-of-use
  - User interface with large touch screen (120 x 99 mm) for intuitive access to the operating parameters. The information is in clear text and can be displayed in local language (please contact your distributor).

Operator interfaces for 30XW 252-1762 units

- Pro-Dialog + interface (standard)
  The standard interface includes five keys to allow Pro-Dialog+ navigation using the intuitive menu structure. All information is thus quickly accessible.

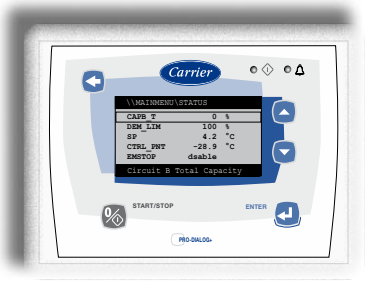

- Pro-Dialog Touch Screen interface (option 158)
  This very user-friendly operator interface with its touch screen is available as an option. The information is easily accessible on the large-format touch screen as clear text in the selected language and allows access to all operating parameters. There is also the possibility to personalise up to eight screens.

Remote management (standard)

The 30XW is equipped with an RS485 serial port that offers multiple remote control, monitoring and diagnostic possibilities. Carrier offers a vast choice of control products, specially designed to control, manage and supervise the operation of an air conditioning system. Please consult your Carrier representative for more information.

The 30XW also communicates with other building management systems via optional communication gateways.

A connection terminal allows remote control of the 30XW by wired cable:
- Start/stop: opening of this contact will shut down the unit
- Dual set-point: closing of this contact activates a second set-point (example: unoccupied mode)
- Demand limit: closing of this contact limits the maximum chiller capacity to a predefined value
- Operation indication: this volt-free contact indicates that the chiller is operating (cooling load) or that it is ready to operate (no cooling load)
- Alert indication: this volt-free contact indicates the necessity to carry out a maintenance operation or the presence of a minor fault
- Alarm indication: this volt-free contact indicates the presence of a major fault that has led to the shut-down of one or several refrigerant circuits

Remote management (EMM option)

The Energy Management Module offers extended remote control possibilities:
- Room temperature: permits set-point reset based on the building indoor air temperature (with Carrier thermostat)
- Set point reset: ensures reset of the cooling set-point based on a 4-20 mA or 0-10 V signal
- Demand limit: permits limitation of the maximum chiller power or current based on a 0-10 V signal
- Demand limit 1 and 2: closing of these contacts limits the maximum chiller power or current to two predefined values
- User safety: this contact can be used for any customer safety loop; opening of the contact generates a specific alarm
- Ice storage end: when ice storage has finished, this input permits return to the second set-point (unoccupied mode)
- Time schedule override: closing of this contact cancels the time schedule effects
- Out of service: this signal indicates that the chiller is completely out of service
- Chiller capacity: this analogue output (0-10 V) gives an immediate indication of the chiller capacity

New generation 06T screw compressor

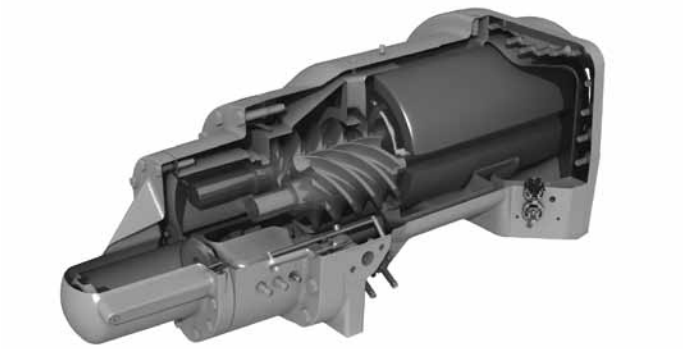

The new generation of the Carrier 06T screw compressors benefits from Carrier's long experience in the development of twin-rotor screw compressors. The compressor is equipped with bearings with oversized rollers, oil pressure lubricated for reliable and durable operation, even at maximum load.

A variable control valve controlled by the oil pressure permits infinitely variable capacity.

Among the other advantages: if a fault occurs e.g. if the condenser is fouled or at very high water temperature, the compressor does not switch off, but continues operation with a reduced capacity (unloaded mode).

The silencer in the discharge line considerably reduces discharge gas pulsations for much quieter operation.

The condenser includes an oil separator that minimises the amount of oil in circulation in the refrigerant circuit and re-directs it to the compressor function.

Options

Options	No.	Description	Advantages	Use for 30XW/ XWH
Medium-temperature brine solution	5	Medium-temperature glycol solution production down to -6°C	Covers specific applications such as ice storage and industrial processes	Only for: 0512, 0562, 1012, 1152
Low-temperature brine solution	6	Low-temperature glycol solution production down to -12°C	Covers specific applications such as ice storage and industrial processes	As above
Unit supplied in two assembled parts	51	Unit supplied in two assembled parts. The unit is equipped with flanges that allow disassembly of the unit on site.	Facilitates installation in plant rooms with limited access	Only for: 1312, 1462, 1612, 1652, 1702, 1762
Master/slave operation	58	Supplementary water outlet temperature sensor kit, field-installed, allows master/slave operation of two units connected in parallel.	Optimised operation of two units connected in parallel with operating time balancing.	252-1762
Single power connection point	81	Unit power connection via one main supply connection	Quick and easy installation	1002-1762
No disconnect switch/but with short-circuit protection	82A	Unit without disconnect switch, but with short-circuit protection device	Permits an external electrical disconnect system for the unit (field-suppied). Unit short-circuit protection remains.	252-1762
Evaporator pump electrical power/ control circuit	84	Unit equipped with an electrical power/control circuit for single evaporator pumps	Quick and easy installation	252-1252
Dual evaporator pump electrical power/ control circuit	84D	Unit equipped with an electrical power/control circuit for dual evaporator pumps	Quick and easy installation	252-1252
Condenser pump electrical power/ control circuit	84R	Unit equipped with an electrical power/control circuit for single condenser pumps	Quick and easy installation	252-1252
Condenser insulation	86	Thermal condenser insulation	Allows configuration with special installation criteria (hot parts insulated).	252-1762
Service valve set	92	Valve set consisting of liquid line valve (evaporator inlet), economiser return line valve and compressor suction line valve to isolate the various refrigerant circuit components.	Simplified service and maintenance	252-1762
Evaporator with one pass	100C	Evaporator with one pass on the water-side. Evaporator inlet and outlet on opposite sides.	Quick and easy installation. Reduced evaporator pressure losses.	252-1762
Condenser with one pass	102C	Condenser with one pass on the water-side. Condenser inlet and outlet on opposite sides.	Quick and easy installation. Reduced condenser pressure losses.	252-1762
21 bar evaporator	104	Reinforced evaporator for extension of the maximum water-side service pressure to 21 bar	Covers applications with a high water column (high buildings)	252-1762
21 bar condenser	104A	Reinforced condenser for extension of the maximum water-side service pressure to 21 bar	Covers applications with a high water column (high buildings)	252-1762
Reversed evaporator water connections	107	Evaporator with reversed water inlet/outlet	Simplification of the water piping	252-1762
Reversed condenser water connections	107A	Condenser with reversed water inlet/outlet	Simplification of the water piping	252-1762
JBus gateway	148B	Two-directional communications board, complies with JBus protocol	Easy connection by communication bus to a building management system	252-1762
BacNet gateway	148C	Two-directional communications board, complies with BacNet protocol	Easy connection by communication bus to a building management system	252-1762
LON gateway	148D	Two-directional communications board, complies with LON protocol	Easy connection by communication bus to a building management system	252-1762
High condensing temperature	150	Increased condenser leaving water temperature up to 63°C. To ensure control of the condenser leaving water temperature, this option must be fitted for 30XWH units (but not for 30XW units).	Allows applications with high condensing temperature (for heat reclaim or dry cooler applications)	252-1762
Condensing temperature limitation	150B	Limitation of the maximum condenser leaving water temperature to 45°C. Modified unit name plate to reflect the reduced power input and current values.	Avoids oversizing of the protection elements and the power cables.	252-1762
Control for low condensing temperature systems	152	Output signal (0-10 V) to control the condenser water inlet valve.	Used for applications with cold water at condenser inlet (well water). In this case the valve controls the water entering temp. to maintain an acceptable condensing pressure.	252-1762
Energy Management Module EMM	156	Remote control module. Additional contacts for an extension of the unit control functions.	Easy connection by wired connection to a building management system	252-1762
Touch Screen interface	158	Touch Screen interface	User-friendly, intuitive large interface with touch screen technology (120 x 99 mm)	252-1762
Code compliance for Switzerland in addition to PED code	197	Additional tests on the water heat exchangers. Additional supply of PED documents, supplementary certificates and test certificates.	Conformance with Swiss regulations	252-1762
Code compliance for Australia	200	Heat exchanger approved for Australian code.	Conformance with Australian regulations	252-1762
Low noise level (-3 dB(A) compared to standard unit)	257	Evaporator and suction piping sound insulation	3 dB(A) quieter than a unit without this option	402-1762
Evaporator water connection kit for welded connections	266	Victaulic piping connections with welded joints on the evaporator.	Easy installation	252-1762
Condenser water connection kit for welded connections	267	Victaulic piping connections with welded joints on the condenser.	Easy installation	252-1762
Evaporator water connection kit for flanged connections	268	Victaulic piping connections with flanged joints on the evaporator.	Easy installation	252-1762
Condenser water connection kit for flanged connections	269	Victaulic piping connections with flanged joints on the condenser.	Easy installation	252-1762
Thermal compressor insulation	271	Thermal compressor insulation	Prevents condensation forming on the compressor (due to the ambient air)	252-1762

Accessories

Accessories	Description	Advantages	Use for 30XW/XWH
Very low noise level (-20 dB(A) compared to standard unit)	Sound absorbing cabinet for single-circuit units	Significantly quieter (-20 dB(A)) than a unit without this option	252-652
Very low noise level (-20 dB(A) compared to standard unit)	Sound absorbing cabinet for twin-circuit units	Significantly quieter (-20 dB(A)) than a unit without this option	1002-1252, 1352, 1452,1552

Physical data, standard units

Standard-efficiency units

30XW--/30XWH-		252	302	352	402	452	552	602	652	702	802	852	1002	1052	1152	1252	1352	1452	1552	1652	1702
Air conditioning application as per EN14511-3:2011*																					
Nominal cooling capacity	kW	278	309	360	459	473	532	538	677	730	792	839	1017	1060	1147	1257	1342	1453	1547	1657	1732
EER	kW/kW	5,44	5,34	5,26	5,21	5,35	5,21	5,17	5,39	5,30	5,19	5,39	5,26	5,21	5,49	5,69	5,51	5,36	5,29	5,67	5,68
Eurovent class, cooling		A	A	A	A	A	A	A	A	A	A	A	A	A	A	A	A	A	A	A	A
Part load performance ESEER	kW/kW	5,82	5,62	5,59	5,72	5,77	5,96	5,66	6,07	6,04	5,81	5,96	6,29	6,35	6,5	6,69	6,44	6,28	6,07	6,62	6,56
Air conditioning application**																					
Nominal cooling capacity	kW	278	310	361	461	474	534	539	679	733	795	843	1021	1066	1152	1262	1349	1461	1557	1664	1739
EER	kW/kW	5,64	5,56	5,50	5,42	5,57	5,46	5,43	5,65	5,58	5,50	5,66	5,56	5,53	5,79	5,97	5,82	5,71	5,67	5,96	6,00
Part load performance ESEER	kW/kW	6,29	6,13	6,15	6,26	6,30	6,68	6,35	6,77	6,81	6,65	6,66	7,37	7,59	7,59	7,65	7,46	7,43	7,31	7,58	7,59
Heating application as per EN14511-3:2011*																					
Heating capacity	kW	322	360	422	516	529	599	632	751	813	887	967	1138	1190	1320	1384	1481	1612	1717	1891	1969
Coefficient of performance (COP)	kW/kW	4,71	4,62	4,63	4,54	4,59	4,47	4,52	4,56	4,49	4,46	4,64	4,48	4,42	4,67	4,73	4,57	4,46	4,41	4,78	4,80
Eurovent class, heating		A	A	A	A	A	A	A	A	A	A	A	A	B	A	A	A	A	B	A	A
Heating application**																					
Heating capacity	kW	321	359	420	514	527	597	629	748	810	883	964	1134	1186	1316	1380	1476	1606	1710	1884	1962
Coefficient of performance (COP)	kW/kW	4,87	4,80	4,85	4,74	4,79	4,70	4,78	4,78	4,73	4,73	4,93	4,76	4,74	4,99	5,02	4,88	4,81	4,80	5,10	5,15
Operating weight***	kg	2054	2059	2083	2575	2575	2613	2644	3247	3266	3282	3492	5370	5408	5705	7066	7267	7305	7337	8681	8699
Sound levels																					
Sound power level******	dB(A)	95	95	95	99	99	99	99	99	99	99	99	102	102	102	102	102	102	102	102	102
Sound pressure level at 1 m†	dB(A)	78	78	78	82	82	82	82	82	82	82	82	84	84	84	83	83	83	83	83	83
Sound levels with option 257																					
Sound power level******	dB(A)	-	-	-	96	96	96	96	96	96	96	96	99	99	99	99	99	99	99	99	99
Sound pressure level at 1 m†	dB(A)	-	-	-	78	78	78	78	78	78	78	78	80	80	80	80	80	80	80	80	80
Dimensions, standard unit																					
Width	mm	2732	2732	2732	2732	2742	2742	2742	3059	3059	3059	2780	4025	4025	4025	4730	4730	4730	4730	4790	4790
Depth	mm	927	927	927	936	936	936	936	1044	1044	1044	1044	1036	1036	1036	1162	1162	1162	1162	1902	1902
Height	mm	1580	1580	1580	1693	1693	1693	1693	1848	1848	1848	1898	1870	1926	2051	2051	2051	2051	2051	1515	1515
Compressors		Semi-hermetic 06T screw compressors, 50 r/s																			
Circuit A		1	1	1	1	1	1	1	1	1	1	1	1	1	1	1	1	1	1	1	1
Circuit B		-	-	-	-	-	-	-	-	-	-	-	1	1	1	1	1	1	1	1	1
Refrigerant charge***		R-134a																			
Circuit A	kg	84	80	78	82	82	82	82	145	140	135	140	85	85	105	120	115	110	105	195	195
Circuit B	kg	-	-	-	-	-	-	-	-	-	-	-	85	85	105	120	115	110	105	195	195
Capacity control		Pro-Dialog, electronic expansion valves (EXV)																			
Minimum capacity	%	15	15	15	15	15	15	15	15	15	15	15	10	10	10	10	10	10	10	10	10
Evaporator		Multi-pipe flooded type																			
Net water volume	l	64	64	64	72	72	72	72	109	109	109	98	185	185	214	307	307	307	307	363	363
Water inlet/outlet connections (Victaulic)	in	5	5	5	5	5	5	5	6	6	6	6	6	6	8	8	8	8	8	8	8
Drain and vent connections (NPT)	in	3/8	3/8	3/8	3/8	3/8	3/8	3/8	3/8	3/8	3/8	3/8	3/8	3/8	3/8	3/8	3/8	3/8	3/8	3/8	3/8
Max. water-side operating pressure	kPa	1000	1000	1000	1000	1000	1000	1000	1000	1000	1000	1000	1000	1000	1000	1000	1000	1000	1000	1000	1000
Condenser		Multi-pipe type																			
Net water volume	l	55	55	55	80	80	80	80	80	80	80	141	238	238	238	347	347	347	347	426	426
Water inlet/outlet connections (Victaulic)	in	5	5	5	5	5	5	5	6	6	6	8	8	8	8	8	8	8	8	8	8
Drain and vent connections (NPT)	in	3/8	3/8	3/8	3/8	3/8	3/8	3/8	3/8	3/8	3/8	3/8	3/8	3/8	3/8	3/8	3/8	3/8	3/8	3/8	3/8
Max. water-side operating pressure	kPa	1000	1000	1000	1000	1000	1000	1000	1000	1000	1000	1000	1000	1000	1000	1000	1000	1000	1000	1000	1000

* Eurovent-certified performances in accordance with standard EN14511-3:2011.
** Gross performances, not in accordance with EN14511-3:2011. These performances do not take into account the correction for the proportional heating capacity and power input generated by the water pump to overcome the internal pressure drop in the heat exchanger.
Conditions in cooling mode: evaporator entering/leaving water temperature 12°C/7°C, condenser entering/leaving water temperature 30°C/35°C, evaporator and condenser fouling factor = 0 m^2 K/W.
Conditions in heating mode: condenser entering/leaving water temperature 40°C/45°C, evaporator entering/leaving water temperature 10°C/7°C, evaporator and condenser fouling factor = 0 m^2 K/W.
*** Weights are guidelines only. The refrigerant charge is given on the unit nameplate.
**** 10^{-12} W in accordance with ISO 9614-1
† In a free field

Physical data, standard units

High-efficiency units

30XW-P/30XWHP		512	562	712	812	862	1012	1162	1312	1462	1612	1762
Air conditioning application as per EN14511-3:2011*												
Nominal cooling capacity	kW	509	577	737	786	861	1039	1157	1316	1469	1626	1756
EER	kW/kW	5.71	5.64	5.83	5.62	5.65	5.73	5.78	5.87	5.84	5.87	5.79
Eurovent class, cooling		A	A	A	A	A	A	A	A	A	A	A
Part load performance ESEER	kW/kW	6.03	6.14	6.42	6.25	6.19	6.64	6.80	6.79	6.77	6.80	6.60
Air conditioning application**												
Nominal cooling capacity	kW	510	578	739	788	863	1042	1161	1319	1473	1632	1764
EER	kW/kW	5.94	5.89	6.04	5.85	5.92	5.95	6.07	6.09	6.10	6.13	6.08
Part load performance ESEER	kW/kW	6.56	6.79	6.96	6.84	6.86	7.36	7.86	7.51	7.59	7.65	7.52
Heating application as per EN14511-3:2011*												
Heating capacity	kW	583	662	842	904	982	1191	1320	1499	1678	1846	1989
Coefficient of performance (COP)	kW/kW	4.91	4.84	4.97	4.80	4.85	4.90	4.86	4.96	4.93	4.89	4.87
Eurovent class, heating		A	A	A	A	A	A	A	A	A	A	A
Heating application**												
Heating capacity	kW	581	660	840	901	978	1188	1316	1495	1673	1841	1983
Coefficient of performance (COP)	kW/kW	5.12	5.07	5.17	5.01	5.10	5.14	5.19	5.19	5.20	5.18	5.19
Operating weight***	kg	2981	3020	3912	3947	3965	6872	6950	9099	9307	10910	10946
Sound levels												
Sound power level******	dB(A)	99	99	99	99	99	102	102	102	102	102	102
Sound pressure level at 1 m†	dB(A)	82	82	81	81	81	83	83	83	83	83	83
Sound levels with option 257												
Sound power level******	dB(A)	96	96	96	96	96	99	99	99	99	99	99
Sound pressure level at 1 m†	dB(A)	78	78	78	78	78	80	80	80	80	80	80
Dimensions, standard unit												
Width	mm	3059	3059	3290	3290	3290	4730	4795	4812	4812	4832	4832
Depth	mm	936	936	1065	1070	1070	1039	1039	1935	1935	2129	2129
Height	mm	1743	1743	1950	1950	1950	1997	1997	1515	1515	1562	1562
Compressors		Semi-hermetic 06T screw compressors, 50 r/s										
Circuit A		1	1	1	1	1	1	1	1	1	1	1
Circuit B		-	-	-	-	-	1	1	1	1	1	1
Refrigerant charge***		R-134a										
Circuit A	kg	130	130	180	175	170	120	120	205	205	240	250
Circuit B	kg	-	-	-	-	-	120	120	205	205	240	250
Capacity control		Pro-Dialog, electronic expansion valves (EXV)										
Minimum capacity	%	15	15	15	15	15	10	10	10	10	10	10
Evaporator		Multi-pipe flooded type										
Net water volume	l	106	106	154	154	154	307	307	363	363	473	473
Water inlet/outlet connections (Victaulic)	in	6	6	8	8	8	8	8	8	8	10	10
Drain and vent connections (NPT)	in	3/8	3/8	3/8	3/8	3/8	3/8	3/8	3/8	3/8	3/8	3/8
Max. water-side operating pressure	kPa	1000	1000	1000	1000	1000	1000	1000	1000	1000	1000	1000
Condenser		Multi-pipe type										
Net water volume	l	112	112	165	165	165	347	347	497	497	623	623
Water inlet/outlet connections (Victaulic)	in	6	6	8	8	8	8	8	10	10	10	10
Drain and vent connections (NPT)	in	3/8	3/8	3/8	3/8	3/8	3/8	3/8	3/8	3/8	3/8	3/8
Max. water-side operating pressure	kPa	1000	1000	1000	1000	1000	1000	1000	1000	1000	1000	1000

* Eurovent-certified performances in accordance with standard EN14511-3:2011.
** Gross performances, not in accordance with EN14511-3:2011. These performances do not take into account the correction for the proportional heating capacity and power input generated by the water pump to overcome the internal pressure drop in the heat exchanger.
Conditions in cooling mode: evaporator entering/leaving water temperature 12°C/7°C, condenser entering/leaving water temperature 30°C/35°C, evaporator and condenser fouling factor = 0 m^2 K/W.
Conditions in heating mode: condenser entering/leaving water temperature 40°C/45°C, evaporator entering/leaving water temperature 10°C/7°C, evaporator and condenser fouling factor = 0 m^2 K/W.
*** Weights are guidelines only. The refrigerant charge is given on the unit nameplate.
**** 10^{-12} W in accordance with ISO 9614-1
† In a free field

Electrical data, standard units

Standard-efficiency units

30XW--/30XWH-		252	302	352	402	452	552	602	652	702	802	852	1002	1052	1152	1252	1352	1452	1552	1652	1702
Power circuit																					
Nominal power supply	V-ph-Hz	400-3-50																			
Voltage range	V	360-440																			
Control circuit		24 V via the built-in transformer																			
Nominal start-up current*																					
Circuit A	A	233	233	303	414	414	414	414	587	587	587	587	414	414	414	587	587	587	587	587	587
Circuit B	A	-	-	-	-	-	-	-	-	-	-	-	414	414	414	414	587	587	587	587	587
Option 81	A	-	-	-	-	-	-	-	-	-	-	-	558	574	574	747	780	801	819	819	819
Maximum start-up current**																					
Circuit A	A	233	233	303	414	414	414	414	587	587	587	587	414	414	414	587	587	587	587	587	587
Circuit B	A	-	-	-	-	-	-	-	-	-	-	-	414	414	414	414	587	587	587	587	587
Option 81	A	-	-	-	-	-	-	-	-	-	-	-	631	656	656	829	882	904	938	938	938
Cosine phi																					
Nominal***		0.83	0.85	0.83	0.87	0.88	0.89	0.89	0.88	0.89	0.90	0.90	0.88	0.89	0.89	0.88	0.88	0.89	0.9	0.9	0.9
Maximum****		0.89	0.89	0.88	0.90	0.90	0.91	0.91	0.90	0.91	0.92	0.92	0.90	0.91	0.91	0.90	0.90	0.91	0.92	0.92	0.92
Maximum power input†																					
Circuit A	kW	76	89	97	128	135	151	151	184	200	223	223	150	151	151	184	184	200	223	223	223
Circuit B	kW	-	-	-	-	-	-	-	-	-	-	-	135	151	151	151	184	200	223	202	223
Option 81	kW	-	-	-	-	-	-	-	-	-	-	-	284	301	301	334	367	399	447	425	447
Nominal current drawn***																					
Circuit A	A	84	96	113	136	144	162	162	193	214	232	232	162	162	162	193	193	214	232	232	232
Circuit B	A	-	-	-	-	-	-	-	-	-	-	-	144	162	162	162	193	214	232	214	232
Option 81	A	-	-	-	-	-	-	-	-	-	-	-	306	324	324	355	386	427	464	446	464
Maximum current drawn (Un)†																					
Circuit A	A	123	145	160	206	217	242	242	295	317	351	351	242	242	242	295	295	317	351	351	351
Circuit B	A	-	-	-	-	-	-	-	-	-	-	-	217	242	242	242	295	317	351	317	351
Option 81	A	-	-	-	-	-	-	-	-	-	-	-	459	484	484	537	590	634	702	668	702
Maximum current drawn (Un -10%)****																					
Circuit A	A	138	162	178	218	230	260	260	304	340	358	358	260	260	260	304	304	340	358	358	358
Circuit B	A	-	-	-	-	-	-	-	-	-	-	-	230	260	260	260	304	340	358	340	358
Option 81	A	-	-	-	-	-	-	-	-	-	-	-	490	520	520	564	608	680	716	698	716
Maximum power input with option 150B†																					
Circuit A	kW	67	79	87	114	118	133	134	173	183	205	205	133	133	133	173	173	183	207	207	207
Circuit B	kW	-	-	-	-	-	-	-	-	-	-	-	118	133	133	133	173	183	207	185	207
Option 81	kW	-	-	-	-	-	-	-	-	-	-	-	251	265	265	305	346	365	414	391	414
Maximum current drawn (Un) with option 150B†																					
Circuit A	A	109	129	142	183	191	212	212	278	290	325	325	212	212	212	278	278	290	325	325	325
Circuit B	A	-	-	-	-	-	-	-	-	-	-	-	191	212	212	212	278	290	325	290	325
Option 81	A	-	-	-	-	-	-	-	-	-	-	-	403	424	424	490	556	580	650	615	650

High-efficiency units

30XW-P/30XWHP		512	562	712	812	862	1012	1162	1312	1462	1612	1762
Power circuit												
Nominal power supply	V-ph-Hz	400-3-50										
Voltage range	V	360-440										
Control circuit		24 V via the built-in transformer										
Nominal start-up current*												
Circuit A	A	414	414	587	587	587	414	414	587	587	587	587
Circuit B	A	-	-	-	-	-	414	414	414	587	587	587
Option 81	A	-	-	-	-	-	556	574	747	780	801	819
Maximum start-up current**												
Circuit A	A	414	414	587	587	587	414	414	587	587	587	587
Circuit B	A	-	-	-	-	-	414	414	414	587	587	587
Option 81	A	-	-	-	-	-	631	656	829	882	904	938
Cosine phi												
Nominal***		0.88	0.89	0.88	0.89	0.90	0.86	0.87	0.88	0.88	0.89	0.90
Maximum****		0.90	0.90	0.90	0.91	0.92	0.89	0.90	0.90	0.90	0.91	0.92
Maximum power input†												
Circuit A	kW	135	151	184	200	223	134	151	184	184	200	223
Circuit B	kW	-	-	-	-	-	134	151	151	184	200	223
Option 81	kW	-	-	-	-	-	267	301	334	367	399	447
Nominal current drawn***												
Circuit A	A	144	162	193	214	232	144	162	193	193	214	232
Circuit B	A	-	-	-	-	-	144	162	162	193	214	232
Option 81	A	-	-	-	-	-	288	324	355	386	427	464
Maximum current drawn (Un)†												
Circuit A	A	217	242	295	317	351	217	242	295	295	317	351
Circuit B	A	-	-	-	-	-	217	242	242	295	317	351
Option 81	A	-	-	-	-	-	434	484	537	590	634	702
Maximum current drawn (Un -10%)****												
Circuit A	A	230	260	304	340	358	230	260	304	304	340	358
Circuit B	A	-	-	-	-	-	230	260	260	304	340	358
Option 81	A	-	-	-	-	-	460	520	564	608	680	716
Maximum power input with option 150B†												
Circuit A	kW	118	133	173	183	207	118	133	173	173	183	207
Circuit B	kW	-	-	-	-	-	118	133	133	173	183	207
Option 81	kW						235	265	305	346	365	414
Maximum current drawn (Un) with option 150B†												
Circuit A	A	191	212	278	290	325	191	212	278	278	290	325
Circuit B	A	-	-	-	-	-	191	212	212	278	290	325
Option 81	A	-	-	-	-	-	382	424	490	556	580	650

* Instantaneous start-up current (maximum operating current of the smallest compressor(s) + locked rotor current or reduced start-up current of the largest compressor). Values obtained at standard Eurovent unit operating conditions: evaporator entering/leaving water temperature = 12°C/7°C, condenser entering/leaving water temperature = 30°C/35°C.

** Instantaneous start-up current (maximum operating current of the smallest compressor(s) + locked rotor current or reduced start-up current of the largest compressor). Values obtained at operation with maximum unit power input.

*** Values obtained at standard Eurovent unit operating conditions: evaporator entering/leaving water temperature = 12°C/7°C, condenser entering/leaving water temperature = 30°C/35°C

**** Values obtained at operation with maximum unit power input.

† Values obtained at operation with maximum unit power input. Values given on the unit name plate.

Physical data, units for high condensing temperatures

Standard-efficiency units (option 150)

30XW--/30XWH-		252	302	352	402	452	552	602	652	702	802	852	1002	1052	1152	1252	1352	1452	1552	1652	1702
Air conditioning application as per EN14511-3:2011*																					
Nominal cooling capacity	kW	287	315	353	424	455	507	524	644	710	743	827	996	1051	1141	1242	1329	1433	1533	1665	1723
EER	kW/kW	4.98	4.89	4.83	4.46	4.75	4.67	4.81	4.68	4.71	4.64	4.86	4.85	4.79	5.03	5.12	4.84	4.80	4.81	5.05	5.04
Eurovent class, cooling		B	B	B	C	B	B	B	B	B	C	B	B	B	B	A	B	B	B	A	B
Air conditioning application**																					
Nominal cooling capacity	kW	288	316	354	425	456	509	526	646	713	746	831	1000	1057	1146	1248	1336	1440	1543	1671	1731
EER	kW/kW	5.16	5.08	5.04	4.62	4.94	4.88	5.04	4.88	4.94	4.89	5.08	5.11	5.06	5.28	5.36	5.08	5.06	5.13	5.28	5.29
Heating application as per EN14511-3:2011*																					
Heating capacity	kW	330	364	409	478	506	566	606	716	789	829	958	1099	1163	1296	1348	1465	1583	1677	1904	1975
Coefficient of performance (COP)	kW/kW	4.73	4.63	4.57	4.29	4.50	4.43	4.54	4.45	4.45	4.41	4.57	4.53	4.47	4.66	4.71	4.52	4.46	4.45	4.70	4.68
Eurovent class, heating		A	A	A	B	A	B	A	A	A	B	A	A	A	A	A	A	A	A	A	A
Heating application**																					
Heating capacity	kW	329	363	407	476	504	564	603	713	786	826	955	1094	1158	1291	1344	1460	1578	1672	1898	1968
Coefficient of performance (COP)	kW/kW	4.91	4.82	4.79	4.46	4.70	4.66	4.82	4.66	4.70	4.68	4.86	4.83	4.79	4.98	5.02	4.82	4.80	4.86	5.02	5.03
Operating weight***	kg	2054	2059	2083	2575	2575	2613	2644	3407	3438	3462	3672	5370	5408	5705	7233	7554	7622	7670	9006	9032
Sound levels																					
Sound power level******	dB(A)	95	95	95	99	99	99	99	102	102	102	102	102	102	102	105	105	105	105	105	105
Sound pressure level at 1 m†	dB(A)	78	78	78	82	82	82	82	84	84	84	84	84	84	84	86	86	86	86	86	86
Sound levels with option 257																					
Sound power level******	dB(A)	-	-	-	96	96	96	96	100	100	100	100	99	99	99	103	103	103	103	103	103
Sound pressure level at 1 m†	dB(A)	-	-	-	78	78	78	78	82	82	82	82	80	80	80	84	84	84	84	84	84
Dimensions, standard unit																					
Width	mm	2732	2732	2732	2732	2742	2742	2742	3059	3059	3059	2780	4025	4025	4025	4730	4730	4730	4730	4790	4790
Depth	mm	927	927	927	936	936	936	936	1044	1044	1044	1044	1036	1036	1036	1162	1162	1162	1162	1902	1902
Height	mm	1580	1580	1580	1693	1693	1693	1693	1848	1848	1848	1898	1870	1926	2051	2051	2051	2051	2051	1515	1515
Compressors		Semi-hermetic 06T screw compressors, 50 r/s																			
Circuit A		1	1	1	1	1	1	1	1	1	1	1	1	1	1	1	1	1	1	1	1
Circuit B		-	-	-	-	-	-	-	-	-	-	-	1	1	1	1	1	1	1	1	1
Refrigerant charge***		R-134a																			
Circuit A	kg	84	80	78	82	82	82	82	145	140	135	140	85	85	105	120	115	110	105	195	195
Circuit B	kg	-	-	-	-	-	-	-	-	-	-	-	85	85	105	120	115	110	105	195	195
Capacity control		Pro-Dialog, electronic expansion valves (EXV)																			
Minimum capacity	%	30	30	30	30	30	30	30	15	15	15	15	10	10	10	10	10	10	10	10	10
Evaporator		Multi-pipe flooded type																			
Net water volume	l	64	64	64	72	72	72	72	109	109	109	98	185	185	214	307	307	307	307	363	363
Water inlet/outlet connections (Victaulic)	in	5	5	5	5	5	5	5	6	6	6	6	6	6	8	8	8	8	8	8	8
Drain and vent connections (NPT)	in	3/8	3/8	3/8	3/8	3/8	3/8	3/8	3/8	3/8	3/8	3/8	3/8	3/8	3/8	3/8	3/8	3/8	3/8	3/8	3/8
Max. water-side operating pressure	kPa	1000	1000	1000	1000	1000	1000	1000	1000	1000	1000	1000	1000	1000	1000	1000	1000	1000	1000	1000	1000
Condenser		Multi-pipe type																			
Net water volume	l	55	55	55	80	80	80	80	80	80	80	141	238	238	238	347	347	347	347	426	426
Water inlet/outlet connections (Victaulic)	in	5	5	5	5	5	5	5	6	6	6	8	8	8	8	8	8	8	8	8	8
Drain and vent connections (NPT)	in	3/8	3/8	3/8	3/8	3/8	3/8	3/8	3/8	3/8	3/8	3/8	3/8	3/8	3/8	3/8	3/8	3/8	3/8	3/8	3/8
Max. water-side operating pressure	kPa	1000	1000	1000	1000	1000	1000	1000	1000	1000	1000	1000	1000	1000	1000	1000	1000	1000	1000	1000	1000

* Eurovent-certified performances in accordance with standard EN14511-3:2011.
** Gross performances, not in accordance with EN14511-3:2011. These performances do not take into account the correction for the proportional heating capacity and power input generated by the water pump to overcome the internal pressure drop in the heat exchanger.
Conditions in cooling mode: evaporator entering/leaving water temperature 12°C/7°C, condenser entering/leaving water temperature 30°C/35°C, evaporator and condenser fouling factor = 0 m^2 K/W.
Conditions in heating mode: condenser entering/leaving water temperature 40°C/45°C, evaporator entering/leaving water temperature 10°C/7°C, evaporator and condenser fouling factor = 0 m^2 K/W.
*** Weights are guidelines only. The refrigerant charge is given on the unit nameplate.
**** 10^{-12} W in accordance with ISO 9614-1
† In a free field

Physical data, units for high condensing temperatures

High-efficiency units (option 150)

30XW-P/30XWHP		512	562	712	812	862	1012	1162	1312	1462	1612	1762
Air conditioning application as per EN14511-3:2011*												
Nominal cooling capacity	kW	517	576	725	781	844	1024	1192	1311	1455	1633	1727
EER	kW/kW	5,20	5,24	5,09	4,94	5,17	5,05	5,29	5,19	5,06	5,22	5,29
Eurovent class, cooling		A	A	A	B	A	A	A	A	A	A	A
Air conditioning application**												
Nominal cooling capacity	kW	518	578	727	783	846	1027	1197	1315	1460	1639	1733
EER	kW/kW	5,39	5,46	5,26	5,12	5,37	5,24	5,55	5,36	5,25	5,42	5,52
Heating application as per EN14511-3:2011*												
Heating capacity	kW	584	651	828	897	1003	1164	1341	1487	1663	1850	1997
Coefficient of performance (COP)	kW/kW	4,88	4,89	4,81	4,68	4,94	4,73	4,86	4,85	4,74	4,84	4,93
Eurovent class, heating		A	A	A	A	A	A	A	A	A	A	A
Heating application**												
Heating capacity	kW	582	648	826	895	999	1161	1337	1482	1657	1844	1991
Coefficient of performance (COP)	kW/kW	5,08	5,13	5,01	4,89	5,20	4,98	5,20	5,07	4,99	5,11	5,25
Operating weight***	kg	2981	3020	4072	4117	4145	6872	6950	9278	9614	11225	11279
Sound levels												
Sound power level******	dB(A)	99	99	102	102	102	102	102	105	105	105	105
Sound pressure level at 1 m†	dB(A)	82	82	84	84	84	83	83	86	86	86	86
Sound levels with option 257												
Sound power level******	dB(A)	96	96	100	100	100	99	99	103	103	103	103
Sound pressure level at 1 m†	dB(A)	78	78	82	82	82	80	80	84	84	84	84
Dimensions, standard unit												
Width	mm	3059	3059	3290	3290	3290	4730	4795	4812	4812	4832	4832
Depth	mm	936	936	1065	1070	1070	1039	1039	1935	1935	2129	2129
Height	mm	1743	1743	1950	1950	1950	1997	1997	1515	1515	1562	1562
Compressors		Semi-hermetic 06T screw compressors, 50 r/s										
Circuit A		1	1	1	1	1	1	1	1	1	1	1
Circuit B		-	-	-	-	-	1	1	1	1	1	1
Refrigerant charge***		R-134a										
Circuit A	kg	130	130	180	175	170	120	120	205	205	240	250
Circuit B	kg	-	-	-	-	-	120	120	205	205	240	250
Capacity control		Pro-Dialog, electronic expansion valves (EXV)										
Minimum capacity	%	30	30	15	15	15	10	10	10	10	10	10
Evaporator		Multi-pipe flooded type										
Net water volume	l	106	106	154	154	154	307	307	363	363	473	473
Water inlet/outlet connections (Victaulic)	in	6	6	8	8	8	8	8	8	8	10	10
Drain and vent connections (NPT)	in	3/8	3/8	3/8	3/8	3/8	3/8	3/8	3/8	3/8	3/8	3/8
Max. water-side operating pressure	kPa	1000	1000	1000	1000	1000	1000	1000	1000	1000	1000	1000
Condenser		Multi-pipe type										
Net water volume	l	112	112	165	165	165	347	347	497	497	623	623
Water inlet/outlet connections (Victaulic)	in	6	6	8	8	8	8	8	10	10	10	10
Drain and vent connections (NPT)	in	3/8	3/8	3/8	3/8	3/8	3/8	3/8	3/8	3/8	3/8	3/8
Max. water-side operating pressure	kPa	1000	1000	1000	1000	1000	1000	1000	1000	1000	1000	1000

* Eurovent-certified performances in accordance with standard EN14511-3:2011.
** Gross performances, not in accordance with EN14511-3:2011. These performances do not take into account the correction for the proportional heating capacity and power input generated by the water pump to overcome the internal pressure drop in the heat exchanger.
Conditions in cooling mode: evaporator entering/leaving water temperature 12°C/7°C, condenser entering/leaving water temperature 30°C/35°C, evaporator and condenser fouling factor = 0 m^2 K/W.
Conditions in heating mode: condenser entering/leaving water temperature 40°C/45°C, evaporator entering/leaving water temperature 10°C/7°C, evaporator and condenser fouling factor = 0 m^2 K/W.
*** Weights are guidelines only. The refrigerant charge is given on the unit nameplate.
**** 10^{-12} W in accordance with ISO 9614-1
† In a free field

Electrical data, units for high condensing temperatures

Standard-efficiency units (option 150)

30XW--/30XWH-		252	302	352	402	452	552	602	652	702	802	852	1002	1052	1152	1252	1352	1452	1552	1652	1702
Power circuit																					
Nominal power supply	V-ph-Hz	400-3-50																			
Voltage range	V	360-440																			
Control circuit		24 V via the built-in transformer																			
Nominal start-up current*																					
Circuit A	A	303	388	388	587	587	587	587	772	772	772	772	587	587	587	772	772	772	772	772	772
Circuit B	A	-	-	-	-	-	-	-	-	-	-	-	587	587	587	772	772	772	772	772	772
Option 81	A	-	-	-	-	-	-	-	-	-	-	-	757	757	757	965	965	986	1004	1004	1004
Maximum start-up current**																					
Circuit A	A	303	388	388	587	587	587	587	772	772	772	772	587	587	587	772	772	772	772	772	772
Circuit B	A	-	-	-	-	-	-	-	-	-	-	-	587	587	587	772	772	772	772	772	772
Option 81	A	-	-	-	-	-	-	-	-	-	-	-	887	887	887	1172	1172	1202	1232	1004	1232
Cosine phi																					
Nominal***		0.79	0.78	0.79	0.83	0.85	0.85	0.85	0.84	0.86	0.87	0.87	0.85	0.85	0.85	0.86	0.85	0.86	0.87	0.86	0.87
Maximum****		0.88	0.87	0.88	0.90	0.90	0.91	0.91	0.90	0.90	0.90	0.90	0.90	0.91	0.91	0.91	0.91	0.91	0.91	0.91	0.91
Maximum power input†																					
Circuit A	kW	97	111	122	156	173	191	191	249	268	286	286	191	191	191	252	252	271	290	290	290
Circuit B	kW	-	-	-	-	-	-	-	-	-	-	-	173	191	191	191	252	271	290	271	290
Option 81	kW	-	-	-	-	-	-	-	-	-	-	-	364	382	382	443	504	542	580	562	580
Nominal current drawn* **																					
Circuit A	A	95	109	125	150	162	171	171	193	214	232	232	171	171	171	210	210	230	250	250	250
Circuit B	A	-	-	-	-	-	-	-	-	-	-	-	162	171	171	171	210	230	250	230	250
Option 81	A	-	-	-	-	-	-	-	-	-	-	-	333	342	342	381	420	460	500	480	500
Maximum current drawn (Un)†																					
Circuit A	A	160	185	200	250	275	300	300	400	430	460	460	300	300	300	400	400	430	460	460	460
Circuit B	A	-	-	-	-	-	-	-	-	-	-	-	275	300	300	300	400	430	460	430	460
Option 81	A	-	-	-	-	-	-	-	-	-	-	-	575	600	600	700	800	860	920	890	920
Maximum current drawn (Un -10%)****																					
Circuit A	A	176	206	224	270	300	330	330	419	455	476	476	330	330	330	419	419	455	476	476	476
Circuit B	A	-	-	-	-	-	-	-	-	-	-	-	300	330	330	330	419	455	476	455	476
Option 81	A	-	-	-	-	-	-	-	-	-	-	-	630	660	660	749	838	910	952	931	952

High-efficiency units (option 150)

30XW-P/30XWHP		512	562	712	812	862	1012	1162	1312	1462	1612	1762
Power circuit												
Nominal power supply	V-ph-Hz	400-3-50										
Voltage range	V	360-440										
Control circuit		24 V via the built-in transformer										
Nominal start-up current*												
Circuit A	A	587	587	772	772	772	587	587	772	772	772	772
Circuit B	A	-	-	-	-	-	587	587	772	772	772	772
Option 81	A	-	-	-	-	-	749	757	965	965	986	1004
Maximum start-up current**												
Circuit A	A	587	587	772	772	772	587	587	772	772	772	772
Circuit B	A	-	-	-	-	-	587	587	772	772	772	772
Option 81	A	-	-	-	-	-	862	887	1172	1172	1202	1232
Cosine phi												
Nominal***		0.88	0.88	0.84	0.86	0.87	0.87	0.88	0.86	0.85	0.86	0.87
Maximum****		0.91	0.92	0.90	0.90	0.90	0.91	0.92	0.91	0.91	0.91	0.91
Maximum power input†												
Circuit A	kW	173	191	194	209	223	173	191	252	252	271	290
Circuit B	kW	-	-	-	-	-	173	191	191	252	271	290
Option 81	kW	-	-	-	-	-	346	382	443	504	542	580
Nominal current drawn* **												
Circuit A	A	162	171	193	214	232	162	171	210	210	230	250
Circuit B	A	-	-	-	-	-	162	171	171	210	230	250
Option 81	A	-	-	-	-	-	324	342	381	420	460	500
Maximum current drawn (Un)†												
Circuit A	A	275	300	400	430	460	275	300	400	400	430	460
Circuit B	A	-	-	-	-	-	275	300	300	400	430	460
Option 81	A	-	-	-	-	-	550	600	700	800	860	920
Maximum current drawn (Un -10%)****												
Circuit A	A	300	330	419	455	476	300	330	419	419	455	476
Circuit B	A	-	-	-	-	-	300	330	330	419	455	476
Option 81	A	-	-	-	-	-	600	660	749	838	910	952

* Instantaneous start-up current (maximum operating current of the smallest compressor(s) + locked rotor current or reduced start-up current of the largest compressor). Values based on standard Eurovent unit operating conditions: evaporator entering/leaving water temp. = 12°C/7°C, condenser entering/leaving water temp. = 30°C/35°C.

** Instantaneous start-up current (maximum operating current of the smallest compressor(s) + locked rotor current or reduced start-up current of the largest compressor). Values obtained at operation with maximum unit power input.

*** Values based on standard Eurovent unit operating conditions: evaporator entering/leaving water temp. = 12°C/7°C, condenser entering/leaving water temp. = 30°C/35°C.

**** Values obtained at operation with maximum unit power input.

† Values obtained at operation with maximum unit power input. Values given on the unit name plate.

Physical data, low-temperature units

Standard and high-efficiency 30XW--/30XWH- units (options 5 and 6)

		Option 5 (medium temperature)				Option 6 (low temperature)			
Reference number		**P0512**	**P0562**	**P1012**	**-1152**	**P0512**	**P0562**	**P1012**	**-1152**
Nominal cooling capacity*	kW	298	332	626	705	222	245	452	502
Power input	kW	85	93	173	193	80	87	163	178
EER	kW/kW	3.49	3.56	3.62	3.66	2.76	2.81	2.78	2.81
Heating capacity	kW	376	417	784	880	295	325	601	664
Coefficient of performance (COP)	kW/kW	4.40	4.47	4.53	4.57	3.67	3.72	3.69	3.73
Nominal cooling capacity**	kW	316	354	668	760	245	271	505	558
Power input	kW	87	95	176	196	82	89	167	182
EER	kW/kW	3.65	3.72	3.80	3.87	3.00	3.04	3.03	3.06
Heating capacity	kW	395	440	827	938	320	352	657	724
Coefficient of performance (COP)	kW/kW	4.56	4.63	4.71	4.78	3.91	3.95	3.94	3.97

Gross performances, not in accordance with EN14511-3:2011. These performances do not take into account the correction for the proportional heating capacity and power input generated by the water pump to overcome the internal pressure drop in the heat exchanger.

Option 5

* Values based on 25% ethylene glycol, evaporator entering/leaving temperatures of -2°C/-6°C and condenser entering/leaving water temperatures of 30°C/35°C.

** Values based on 24% propylene glycol, evaporator entering/leaving temperatures of +1°C/-3°C and condenser entering/leaving water temperatures of 30°C/35°C.

Note: Evaporator with 2 pass configuration with water inlet and outlet on the same side.

Option 6

* Values based on 35% ethylene glycol, evaporator entering/leaving temperatures of -8°C/-12°C and condenser entering/leaving water temperatures of 30°C/35°C.

** Values based on 30% propylene glycol, evaporator entering/leaving temperatures of -4°C/-8°C and condenser entering/leaving water temperatures of 30°C/35°C.

Note: Evaporator with 3 pass configuration with water inlet and outlet on opposite sides.

Electrical data, low-temperature units

Standard and high-efficiency 30XW--/30XWH- units (options 5 and 6)

		Options 5 and 6			
Reference number		**P0512**	**P0562**	**P1012**	**-1152**
Power circuit					
Nominal power supply	V-ph-Hz	400-3-50			
Voltage range	V	360-440			
Control circuit		24 V via the built-in transformer			
Nominal start-up current*					
Circuits A/B	A	587/-	587/-	587/587	587/587
Option 81	A	-	-	749	757
Maximum start-up current**					
Circuits A/B	A	587/-	587/-	587/587	587/587
Option 81	A	-	-	862	887
Cosine phi					
Nominal***		0.88	0.88	0.87	0.88
Maximum****		0.91	0.92	0.91	0.92
Maximum power input†					
Circuits A/B	kW	173/-	191/-	173/173	191/191
Option 81	kW	-	-	346	382
Nominal current drawn***					
Circuits A/B	A	162/-	171/-	162/162	171/171
Option 81	A	-	-	324	342
Maximum current drawn (Un)†					
Circuits A/B	A	275/-	300/-	275/275	300/300
Option 81	A	-	-	550	600
Maximum current drawn (Un -10%)****					
Circuits A/B	A	300/-	330/-	300/300	330/330
Option 81	A	-	-	600	660

* Instantaneous start-up current (maximum operating current of the smallest compressor(s) + locked rotor current or reduced start-up current of the largest compressor). Values obtained at standard Eurovent unit operating conditions: evaporator entering/leaving water temperature = 12°C/7°C, condenser entering/leaving water temperature = 30°C/35°C.

** Instantaneous start-up current (maximum operating current of the smallest compressor(s) + locked rotor current or reduced start-up current of the largest compressor). Values obtained at operation with maximum unit power input.

*** Values obtained at standard Eurovent unit operating conditions: evaporator entering/leaving water temperature = 12°C/7°C, condenser entering/leaving water temperature = 30°C/35°C. Maximum values obtained at operation with maximum unit power input.

**** Values obtained at operation with maximum unit power input.

† Values obtained at operation with maximum unit power input. Values given on the unit name plate.

Notes, electrical data and operating conditions 30XW

- As standard
  30XW 252 to 862 units have a single power connection point located immediately upstream of the main disconnect switch.
  30XW 1002 to 1762 units have two connection points located immediately upstream of the main disconnect switches.
- The control box includes the following standard features:
  - One main disconnect switch per circuit*
  - Starter and motor protection devices for each compressor
  - Anti-short cycle protection devices*
  - Control devices
- Field connections:
  All connections to the system and the electrical installations must be in full accordance with all applicable codes.
- The Carrier 30XW units are designed and built to ensure conformance with local codes. The recommendations of European standard EN 60204-1 (corresponds to IEC 60204-1) (machine safety - electrical machine components - part 1: general regulations) are specifically taken into account, when designing the electrical equipment.
- The absence of power supply disconnect switch(es) and short-cycle protection devices in option 82A is an important factor that has to be taken into consideration at the installation site.
  Units equipped with one of these two options are supplied with a declaration of incorporation, as required by the machinery directive.

Notes:

- Generally the recommendations of IEC 60364 are accepted as compliance with the requirements of the installation directives. Conformance with EN 60204-1 is the best means of ensuring compliance with the Machines Directive.
- Annex B of EN 60204 1 describes the electrical characteristics used for the operation of the machines.

1. The operating environment for the 30XW units is specified below:
- Environment** Environment as classified in EN 60721 (corresponds to IEC 60721):
  - indoor installation
  - ambient temperature range: minimum temperature +5°C to +42°C, class AA4
  - altitude: lower than or equal to 2000 m
  - presence of water: class AD2 (possibility of water droplets)
  - presence of hard solids, class 4S2 (no significant dust present)
  - presence of corrosive and polluting substances, class 4C2 (negligible)
2. Power supply frequency variation: ± 2 Hz.
3. The neutral (N) line must not be connected directly to the unit (if necessary use a transformer).
4. Overcurrent protection of the power supply conductors is not provided with the unit.
5. The factory installed disconnect switch(es)/circuit breaker(s) is (are) of a type suitable for power interruption in accordance with EN 60947-3 (corresponds to IEC 60947-3).
6. The units are designed for connection to TN networks (IEC 60364). For IT networks the earth connection must not be at the network earth. Provide a local earth, consult competent local organisations to complete the electrical installation.

NOTE: If particular aspects of an actual installation do not conform to the conditions described above, or if there are other conditions which should be considered, always contact your local Carrier representative.

* Not provided for units equipped with option 82A

** The required protection level for this class is IP21BW or 1PX1B (according to reference document IEC 60529). All 30XW units fulfil this protection condition. In general the casings fulfil class IP23.
Please note that for machine sizes 652 to 852 equipped with option 150 access to the motor terminals is classified as IPX3B.

Part load performances

With the rapid increase in energy costs and the care about environmental impacts of electricity production, power consumption of air conditioning equipment has become an important topic. The energy efficiency of a unit at full load is rarely representative of the actual performance of the units, as on average a unit works less than 5% of the time at full load.

The heat load of a building depends on many factors, such as the outside air temperature, the exposure to the sun and its occupation.

Consequently it is preferable to use the average energy efficiency, calculated at several operating points that are representative for the unit utilisation.

IPLV (in accordance with AHRI 550/590)

The IPLV (integrated part load value) allows evaluation of the average energy efficiency based on four operating conditions defined by the AHRI (Air Conditioning, Heating and Refrigeration Institute). The IPLV is the average weighted value of the energy efficiency ratios (EER) at different operating conditions, weighted by the operating time.

ESEER (in accordance with EUROVENT)

The ESEER (European seasonal energy efficiency ratio) permits evaluation of the average energy efficiency at part load, based on four operating conditions defined by Eurovent. The ESEER is the average value of energy efficiency ratios (EER) at different operating conditions, weighted by the operating time.

IPLV (integrated part load value)

Load %	Condenser entering water temperature, °C	Energy efficiency	Operating time, %
100	29.4	EER_1	1
75	23.9	EER_2	42
50	18.3	EER_3	45
25	18.3	EER_4	12
IPLV = EER_1 x 1% + EER_2 x 42% + EER_3 x 45% + EER_4 x 12%			

Note: Constant leaving water temperature 6.67°C (44°F).
Condenser fouling factor: 0.44 x 10^{-4} (m^2 K)/W, evaporator fouling factor: 0.18 x 10^{-4} (m^2 K)/W.

ESEER (European seasonal energy efficiency ratio)

Load %	Condenser entering water temperature, °C	Energy efficiency	Operating time, %
100	30	EER_1	3
75	26	EER_2	33
50	22	EER_3	41
25	18	EER_4	23
ESEER = EER_1 x 3% + EER_2 x 33% + EER_3 x 41% + EER_4 x 23%			

Note: Constant leaving water temperature 7°C.

30XW--/30XWH-		252	302	352	402	452	552	602	652	702	802	852	1002	1052	1152	1252	1352	1452	1552	1652	1702
Standard-efficiency units																					
IPLV	kW/kW	6.99	6.77	6.75	6.59	6.82	7.13	6.85	7.38	7.35	7.21	7.20	7.54	7.77	7.75	8.02	7.83	7.75	7.60	7.96	7.89
ESEER	kW/kW	5.82	5.62	5.59	5.72	5.77	5.96	5.66	6.07	6.04	5.81	5.96	6.29	6.35	6.50	6.69	6.44	6.28	6.07	6.62	6.56
Standard-efficiency units with option 150																					
IPLV	kW/kW	6.61	6.70	6.68	6.05	6.30	6.42	6.31	6.06	6.35	6.21	6.61	6.85	6.85	6.87	6.95	6.41	6.93	6.94	6.95	7.12
ESEER	kW/kW	5.87	5.92	5.84	5.42	5.62	5.66	5.57	5.35	5.44	5.22	5.57	5.84	5.77	5.93	5.98	5.54	5.81	5.74	6.08	6.20

30XW-P/30XWHP		512	562	712	812	862	1012	1162	1312	1462	1612	1762
High-efficiency units												
IPLV	kW/kW	7.19	7.43	7.68	7.53	7.46	7.58	8.10	7.95	8.08	8.20	7.90
ESEER	kW/kW	6.03	6.14	6.42	6.25	6.19	6.64	6.80	6.79	6.77	6.80	6.60
High-efficiency units with option 150												
IPLV	kW/kW	6.73	6.92	7.12	6.87	7.07	6.71	7.28	7.29	7.39	7.54	7.82
ESEER	kW/kW	6.01	6.12	6.25	6.05	5.97	5.92	6.23	6.43	6.43	6.59	6.60

ESEER Calculations according to standard performances (in accordance with EN14511-3:2011) and certified by Eurovent.
IPLV Calculations according to standard performances (in accordance with AHRI 550-590).

Sound spectrum

30XW units

		Octave bands, Hz						Sound power levels	
		125	250	500	1k	2k	4k		
Standard-efficiency units 30XW--/30XWH-									
252	dB	56	81	86	93	88	70	dB(A)	95
302	dB	56	81	86	93	88	70	dB(A)	95
352	dB	56	81	86	93	88	70	dB(A)	95
402	dB	76	85	94	97	87	75	dB(A)	99
452	dB	76	85	94	97	87	75	dB(A)	99
552	dB	76	85	94	97	87	75	dB(A)	99
602	dB	76	85	94	97	87	75	dB(A)	99
652	dB	72	84	94	97	89	74	dB(A)	99
702	dB	72	84	94	97	89	74	dB(A)	99
802	dB	72	84	94	97	89	74	dB(A)	99
852	dB	72	84	94	97	89	74	dB(A)	99
1002	dB	79	88	97	100	90	78	dB(A)	102
1052	dB	79	88	97	100	90	78	dB(A)	102
1252	dB	79	88	97	100	90	78	dB(A)	102
1352	dB	77	88	97	100	91	78	dB(A)	102
1452	dB	75	87	97	100	92	77	dB(A)	102
1552	dB	75	87	97	100	92	77	dB(A)	102
1652	dB	75	87	97	100	92	77	dB(A)	102
1702	dB	75	87	97	100	92	77	dB(A)	102
High-efficiency units 30XW-P/30XWHP									
512	dB	76	85	94	97	87	75	dB(A)	99
562	dB	76	85	94	97	87	75	dB(A)	99
712	dB	72	84	94	97	89	74	dB(A)	99
812	dB	72	84	94	97	89	74	dB(A)	99
862	dB	72	84	94	97	89	74	dB(A)	99
1012	dB	79	88	97	100	90	78	dB(A)	102
1162	dB	79	88	97	100	90	78	dB(A)	102
1312	dB	77	88	97	100	91	78	dB(A)	102
1462	dB	75	87	97	100	92	77	dB(A)	102
1612	dB	75	87	97	100	92	77	dB(A)	102
1762	dB	75	87	97	100	92	77	dB(A)	102

30XW units with high condensing temperature (option 150)

		Octave bands, Hz						Sound power levels	
		125	250	500	1k	2k	4k		
Standard-efficiency units 30XW--/30XWH- (option 150)									
252	dB	55	80	89	92	88	77	dB(A)	95
302	dB	55	80	89	92	88	77	dB(A)	95
352	dB	55	80	89	92	88	77	dB(A)	95
402	dB	76	85	94	97	87	75	dB(A)	99
452	dB	76	85	94	97	87	75	dB(A)	99
552	dB	76	85	94	97	87	75	dB(A)	99
602	dB	76	85	94	97	87	75	dB(A)	99
652	dB	69	89	97	99	92	77	dB(A)	102
702	dB	69	89	97	99	92	77	dB(A)	102
802	dB	69	89	97	99	92	77	dB(A)	102
852	dB	69	89	97	99	92	77	dB(A)	102
1002	dB	79	88	97	100	90	78	dB(A)	102
1052	dB	79	88	97	100	90	78	dB(A)	102
1252	dB	79	88	97	100	90	78	dB(A)	102
1352	dB	74	92	100	102	95	79	dB(A)	105
1452	dB	74	92	100	102	95	79	dB(A)	105
1552	dB	74	92	100	102	95	79	dB(A)	105
1652	dB	74	92	100	102	95	79	dB(A)	105
1702	dB	74	92	100	102	95	79	dB(A)	105
High-efficiency units 30XW-P/30XWHP (option 150)									
512	dB	76	85	94	97	87	75	dB(A)	99
562	dB	76	85	94	97	87	75	dB(A)	99
712	dB	69	89	97	99	92	77	dB(A)	102
812	dB	69	89	97	99	92	77	dB(A)	102
862	dB	69	89	97	99	92	77	dB(A)	102
1012	dB	79	88	97	100	90	78	dB(A)	102
1162	dB	79	88	97	100	90	78	dB(A)	102
1312	dB	74	92	100	102	95	79	dB(A)	105
1462	dB	74	92	100	102	95	79	dB(A)	105
1612	dB	74	92	100	102	95	79	dB(A)	105
1762	dB	74	92	100	102	95	79	dB(A)	105

30XW units with option 257*

		Octave bands, Hz						Sound power levels	
		125	250	500	1k	2k	4k		
Standard-efficiency units 30XW--/30XWH-									
252	dB	-	-	-	-	-	-	dB(A)	-
302	dB	-	-	-	-	-	-	dB(A)	-
352	dB	-	-	-	-	-	-	dB(A)	-
402	dB	76	85	90	93	85	75	dB(A)	96
452	dB	76	85	90	93	85	75	dB(A)	96
552	dB	76	85	90	93	85	75	dB(A)	96
602	dB	76	85	90	93	85	75	dB(A)	96
652	dB	72	84	90	93	87	74	dB(A)	96
702	dB	72	84	90	93	87	74	dB(A)	96
802	dB	72	84	90	93	87	74	dB(A)	96
852	dB	72	84	90	93	87	74	dB(A)	96
1002	dB	79	88	93	96	88	78	dB(A)	99
1052	dB	79	88	93	96	88	78	dB(A)	99
1252	dB	79	88	93	96	88	78	dB(A)	99
1352	dB	77	87	93	96	89	77	dB(A)	99
1452	dB	77	87	93	96	89	77	dB(A)	99
1552	dB	77	87	93	96	89	77	dB(A)	99
1652	dB	77	87	93	96	89	77	dB(A)	99
1702	dB	77	87	93	96	89	77	dB(A)	99
High-efficiency units 30XW-P/30XWHP									
512	dB	76	85	90	93	85	75	dB(A)	96
562	dB	76	85	90	93	85	75	dB(A)	96
712	dB	72	84	90	93	87	74	dB(A)	96
812	dB	72	84	90	93	87	74	dB(A)	96
862	dB	72	84	90	93	87	74	dB(A)	96
1012	dB	79	88	93	96	88	78	dB(A)	99
1162	dB	79	88	93	96	88	78	dB(A)	99
1312	dB	77	87	93	96	89	77	dB(A)	99
1462	dB	77	87	93	96	89	77	dB(A)	99
1612	dB	77	87	93	96	89	77	dB(A)	99
1762	dB	77	87	93	96	89	77	dB(A)	99

30XW units with high condensing temperature (opt. 150)* and opt. 257*

		Octave bands, Hz						Sound power levels	
		125	250	500	1k	2k	4k		
Standard-efficiency units 30XW--/30XWH- (option 150)									
252	dB	-	-	-	-	-	-	dB(A)	-
302	dB	-	-	-	-	-	-	dB(A)	-
352	dB	-	-	-	-	-	-	dB(A)	-
402	dB	76	85	90	93	85	75	dB(A)	96
452	dB	76	85	90	93	85	75	dB(A)	96
552	dB	76	85	90	93	85	75	dB(A)	96
602	dB	76	85	90	93	85	75	dB(A)	96
652	dB	69	89	93	98	91	76	dB(A)	100
702	dB	69	89	93	98	91	76	dB(A)	100
802	dB	69	89	93	98	91	76	dB(A)	100
852	dB	69	89	93	98	91	76	dB(A)	100
1002	dB	79	88	93	96	88	78	dB(A)	99
1052	dB	79	88	93	96	88	78	dB(A)	99
1252	dB	79	88	93	96	88	78	dB(A)	99
1352	dB	74	92	96	101	94	78	dB(A)	103
1452	dB	74	92	96	101	94	78	dB(A)	103
1552	dB	74	92	96	101	94	78	dB(A)	103
1652	dB	74	92	96	101	94	78	dB(A)	103
1702	dB	74	92	96	101	94	78	dB(A)	103
High-efficiency units 30XW-P/30XWHP (option 150)									
512	dB	76	85	90	93	85	75	dB(A)	96
562	dB	76	85	90	93	85	75	dB(A)	96
712	dB	69	89	93	98	91	76	dB(A)	100
812	dB	69	89	93	98	91	76	dB(A)	100
862	dB	69	89	93	98	91	76	dB(A)	100
1012	dB	79	88	93	96	88	78	dB(A)	99
1162	dB	79	88	93	96	88	78	dB(A)	99
1312	dB	74	92	96	101	94	78	dB(A)	103
1462	dB	74	92	96	101	94	78	dB(A)	103
1612	dB	74	92	96	101	94	78	dB(A)	103
1762	dB	74	92	96	101	94	78	dB(A)	103

* Option 257 = Low sound level

Note: The sound levels by octave bands are given for nformation only and not contractually binding. Ony the global sound level is contractually binding.

Sound spectrum (continued)

30XW with "Very low sound level" accessory

		Octave bands, Hz						Sound power levels	
		125	250	500	1k	2k	4k		
Standard-efficiency units 30XW--/30XWH-									
252	dB	51	64	67	72	68	57	dB(A)	75
302	dB	51	64	67	72	68	57	dB(A)	75
352	dB	51	64	67	72	68	57	dB(A)	75
402	dB	71	68	75	74	65	61	dB(A)	79
452	dB	71	68	75	74	65	61	dB(A)	79
552	dB	71	68	75	74	65	61	dB(A)	79
602	dB	71	68	75	74	65	61	dB(A)	79
652	dB	67	67	75	74	67	60	dB(A)	79
702	dB	67	67	75	74	67	60	dB(A)	79
802	dB	67	67	75	74	67	60	dB(A)	79
852	dB	67	67	75	74	67	60	dB(A)	79
1002	dB	70	72	78	79	67	60	dB(A)	82
1052	dB	70	72	78	79	67	60	dB(A)	82
1252	dB	70	72	78	79	67	60	dB(A)	82
1352	dB	68	72	78	79	68	60	dB(A)	82
1452	dB	66	71	78	79	69	59	dB(A)	82
1552	dB	66	71	78	79	69	59	dB(A)	82
1652	dB	66	71	78	79	69	59	dB(A)	82
1702	dB	-	-	-	-	-	-	dB(A)	-
High-efficiency units 30XW-P/30XWHP									
512	dB	71	68	75	74	65	61	dB(A)	79
562	dB	71	68	75	74	65	61	dB(A)	79
712	dB	67	67	75	74	67	60	dB(A)	79
812	dB	67	67	75	74	67	60	dB(A)	79
862	dB	67	67	75	74	67	60	dB(A)	79
1012	dB	70	72	78	79	67	60	dB(A)	82
1162	dB	70	72	78	79	67	60	dB(A)	82
1312	dB	-	-	-	-	-	-	dB(A)	-
1462	dB	-	-	-	-	-	-	dB(A)	-
1612	dB	-	-	-	-	-	-	dB(A)	-
1762	dB	-	-	-	-	-	-	dB(A)	-

* Option 257 = Low sound level

Note: The sound levels by octave bands are given for nformation only and not contractually binding. Ony the global sound level is contractually binding.

30XW unit with high condensing temperature (option 150) and "Very low sound level" accessory

		Octave bands, Hz						Sound power levels	
		125	250	500	1k	2k	4k		
Standard-efficiency units 30XW--/30XWH- (option 150)									
252	dB	50	64	70	71	68	64	dB(A)	75
302	dB	50	64	70	71	68	64	dB(A)	75
352	dB	50	64	70	71	68	64	dB(A)	75
402	dB	71	68	75	74	65	61	dB(A)	79
452	dB	71	68	75	74	65	61	dB(A)	79
552	dB	71	68	75	74	65	61	dB(A)	79
602	dB	71	68	75	74	65	61	dB(A)	79
652	dB	64	72	78	78	72	64	dB(A)	82
702	dB	64	72	78	78	72	64	dB(A)	82
802	dB	64	72	78	78	72	64	dB(A)	82
852	dB	64	72	78	78	72	64	dB(A)	82
1002	dB	74	71	78	77	68	64	dB(A)	82
1052	dB	74	71	78	77	68	64	dB(A)	82
1252	dB	74	71	78	77	68	64	dB(A)	82
1352	dB	65	76	81	81	72	61	dB(A)	85
1452	dB	65	76	81	81	72	61	dB(A)	85
1552	dB	65	76	81	81	72	61	dB(A)	85
1652	dB	65	76	81	81	72	61	dB(A)	85
1702	dB	-	-	-	-	-	-	dB(A)	-
High-efficiency units 30XW-P/30XWHP (option 150)									
512	dB	71	68	75	74	65	61	dB(A)	79
562	dB	71	68	75	74	65	61	dB(A)	79
712	dB	64	72	78	78	72	64	dB(A)	82
812	dB	64	72	78	78	72	64	dB(A)	82
862	dB	64	72	78	78	72	64	dB(A)	82
1012	dB	74	71	78	77	68	64	dB(A)	82
1162	dB	74	71	78	77	68	64	dB(A)	82
1312	dB	-	-	-	-	-	-	dB(A)	-
1462	dB	-	-	-	-	-	-	dB(A)	-
1612	dB	-	-	-	-	-	-	dB(A)	-
1762	dB	-	-	-	-	-	-	dB(A)	-

Operating limits and operating ranges

Standard 30XW-- and 30XW-P units	Minimum	Maximum
Evaporator		
Entering temperature at start-up	-	35.0°C
Leaving temperature during operation	3.3°C*	20.0°C
Entering/leaving temperature difference at full load	2.8 K	11.1 K
Condenser		
Entering temperature at start-up	13.0°C**	-
Leaving temperature during operation	19.0°C**	50.0°C***
Entering/leaving temperature difference at full load	2.8 K	11.1 K

* For low-temperature applications, where the leaving water temperature is below 3.3°C, a frost protection solution must be used. Please refer to option 5 and option 6.
** For lower condenser temperatures, a water flow control valve must be used at the condenser (two or three-way valve). Please refer to option 152 to ensure the correct condensing temperature.
*** Please refer to option 150 for applications with a high condenser leaving temperature (up to 63°C).

Standard units

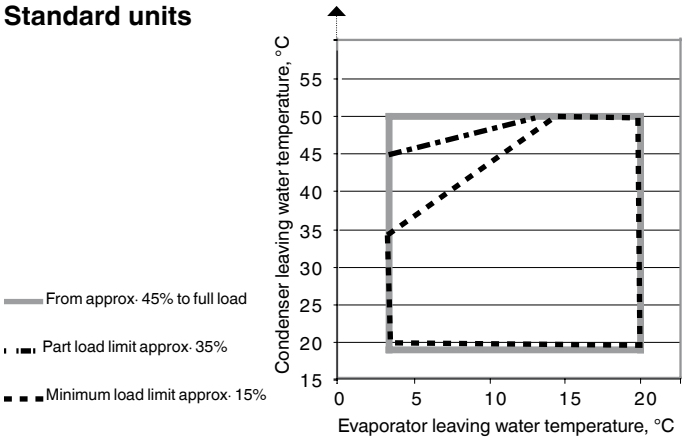

Units with option 150 30XW--/30XWH-/30XW-P/30XWHP	Minimum	Maximum
Evaporator		
Entering temperature at start-up	-	35.0°C
Leaving temperature during operation	3.3°C*	15.0°C
Entering/leaving temperature difference at full load	2.8 K	11.1 K
Condenser		
Entering temperature at start-up	13.0°C**	-
Leaving temperature during operation	23.0°C**	63.0°C
Entering/leaving temperature difference at full load	2.8 K	11.1 K

* For low-temperature applications, where the leaving water temperature is below 3.3°C, a frost protection solution must be used. Please refer to option 5 and option 6.
** For lower condenser temperatures, a water flow control valve must be used at the condenser (two or three-way valve). Please refer to option 152 to ensure the correct condensing temperature.

Option 150

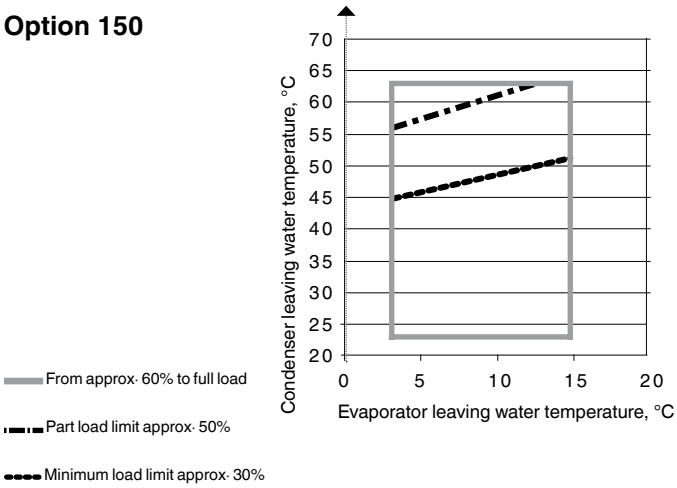

Units with options 5 and 6 30XW--/30XWH-/30XW-P/30XWHP	Minimum	Maximum
Evaporator		
Entering temperature at start-up	-	35.0°C
Leaving temperature during operation*		
EG 5 Option 5 with ethylene glycol	-6°C	15.0°C
PG 5 Option 5 with propylene glycol	-3°C	15.0°C
EG 6 Option 6 with ethylene glycol	-12°C	15.0°C
PG 6 Option 6 with propylene glycol	-8°C	15.0°C
Entering/leaving temp. difference at full load	2.8 K	11.1 K***
Condenser		
Entering temperature at start-up	13.0°C**	-
Leaving temperature during operation	19.0/23.0°C**	55.0/63.0°C****
Entering/leaving temp. difference at full load	2.8 K	11.1 K

* The operating range with evaporator leaving temperatures above 3°C is permitted, but the performances are not optimised.
** For lower condenser temperatures, a water flow control valve must be installed at the condenser (two-way or three-way). Please refer to option 152 to ensure the correct condensing temperature.
*** Please refer to chapter 10.5 of the installation manual for the minimum recommended evaporator glycol flow rate.
**** Depends on the conditions at the evaporator and the load conditions.

Options 5 and 6

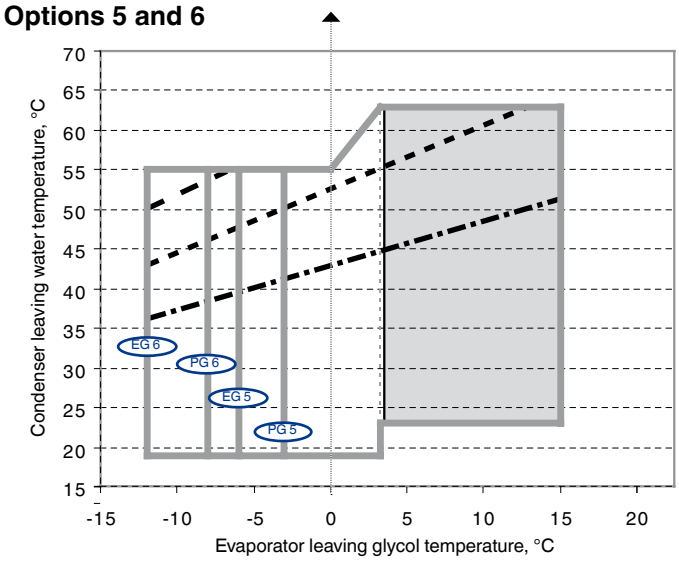

Operating range permitted, but performances are not optimised
Full load with option 5/6 and ethylene or propylene glycol
Part load limit approx. 80%
Part load limit approx. 50%
Part load limit approx. 30%

NOTES: Ambient temperatures: During storage and transport of the 30XW units (including by container) the minimum and maximum permissible temperatures are -20°C and 72°C (and 65°C for option 200).

For more precise details refer to the unit selection program.

Evaporator pressure drop curves

Units with two evaporator passes (standard):
30XW--/30XWH-/30XW-P/30XWHP

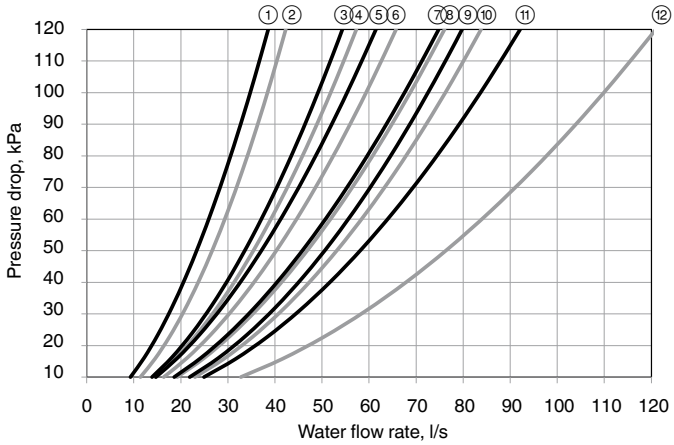

1. 252, 302, 352
2. 402, 452, 552, 602
3. 512, 562
4. 652, 702, 802
5. 852
6. 1002, 1052
7. 1152
8. 712, 812, 862
9. 1012,1162
10. 1252, 1352, 1452, 1552
11. 1312, 1462, 1652, 1702
12. 1612, 1762

Units with one evaporator pass (option 100C):
30XW--/30XWH-/30XW-P/30XWHP

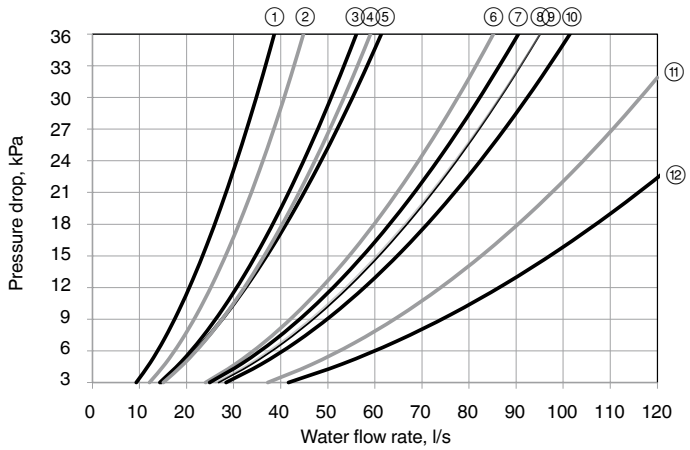

1. 252, 302, 352
2. 402, 452, 552, 602
3. 512, 562
4. 652, 702, 802
5. 852
6. 1002, 1052
7. 1012,1162
8. 1252, 1352, 1452, 1552
9. 712, 812, 862
10. 1152
11. 1312, 1462, 1652, 1702
12. 1612, 1762

Condenser pressure drop curves

Units with two condenser passes (standard):
30XW--/30XWH-/30XW-P/30XWHP

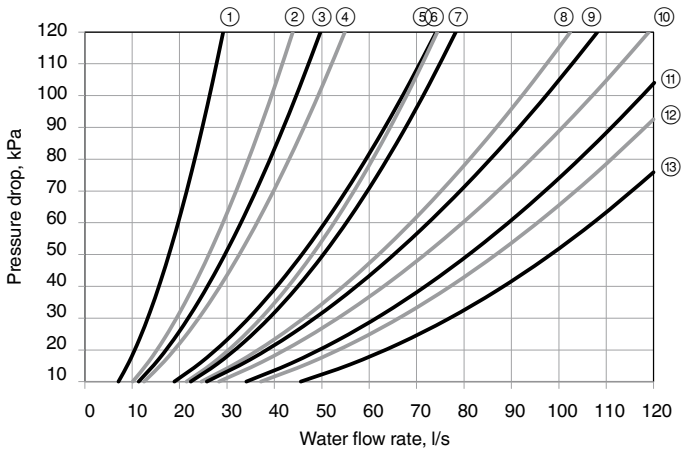

1. 252, 302, 352
2. 402, 452, 552, 602
3. 512, 562
4. 652, 702, 802
5. 712, 812, 862
6. 852
7. 1002, 1052
8. 1152
9. 1012,1162
10. 1252, 1352, 1452, 1552
11. 1312, 1462
12. 1652, 1702
13. 1612, 1762

Units with one condenser pass (option 102C):
30XW--/30XWH-/30XW-P/30XWHP

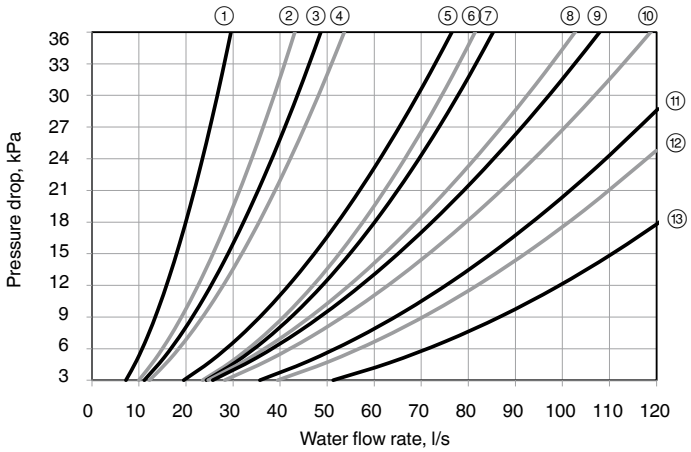

1. 252, 302, 352
2. 402, 452, 552, 602
3. 512, 562
4. 652, 702, 802
5. 712, 812, 862
6. 852
7. 1002, 1052
8. 1152
9. 1012,1162
10. 1252, 1352, 1452, 1552
11. 1312, 1462
12. 1652, 1702
13. 1612, 1762

Dimensions/clearances

30XW--/30XWH- 252-852
30XW-P/30XWHP 512-862

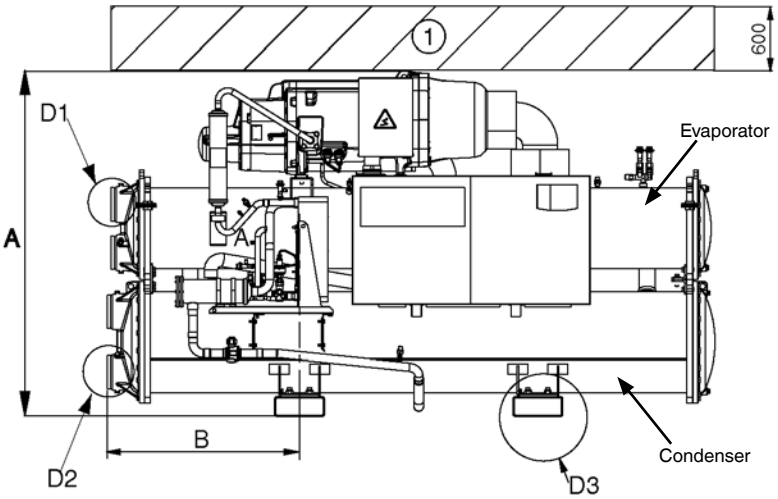

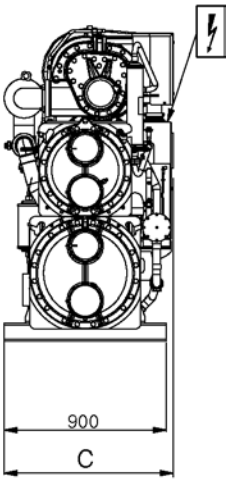

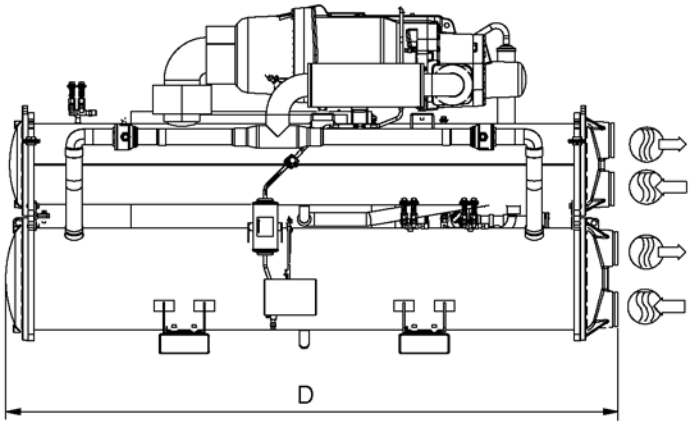

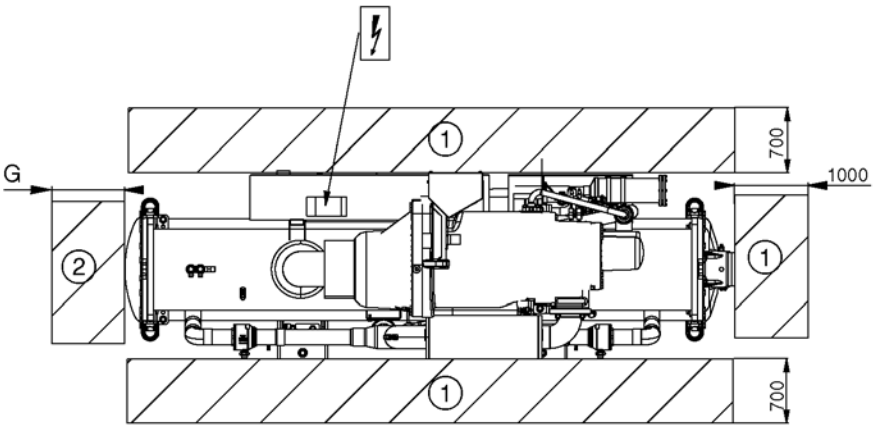

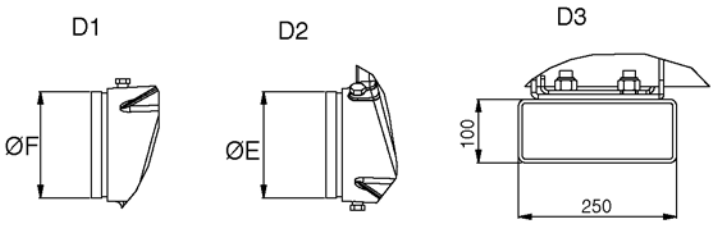

	Dimensions in mm						
	A	B	C	D	E	F	G
Standard-efficiency units 30XW--/30XWH-							
252	1580	800	927	2732	141.3	141.3	2600
302	1580	800	927	2732	141.3	141.3	2600
352	1580	800	927	2732	141.3	141.3	2600
402	1693	810	936	2742	141.3	141.3	2600
452	1693	810	936	2742	141.3	141.3	2600
552	1693	810	936	2742	141.3	141.3	2600
602	1693	810	936	2742	141.3	141.3	2600
652	1848	968	1044	3059	168.3	168.3	2800
702	1848	968	1044	3059	168.3	168.3	2800
802	1848	968	1044	3059	168.3	168.3	2800
852	1898	828	1044	2780	219.1	168.3	2600
High-efficiency units 30XW-P/30XHP							
512	1743	968	936	3059	168.3	168.3	2800
562	1743	968	936	3059	168.3	168.3	2800
712	1950	1083	1065	3290	219.1	219.1	3100
812	1950	1083	1070	3290	219.1	219.1	3100
862	1950	1083	1070	3290	219.1	219.1	3100
Standard-efficiency units 30XW--/30XWH- (option 150)							
252	1580	800	927	2732	141.3	141.3	2600
302	1580	800	927	2732	141.3	141.3	2600
352	1580	800	927	2732	141.3	141.3	2600
402	1693	810	936	2742	141.3	141.3	2600
452	1693	810	936	2742	141.3	141.3	2600
552	1693	810	936	2742	141.3	141.3	2600
602	1693	810	936	2742	141.3	141.3	2600
652	1868	968	1090	3059	168.3	168.3	2800
702	1868	968	1090	3059	168.3	168.3	2800
802	1868	968	1090	3059	168.3	168.3	2800
852	1920	828	1090	2780	168.3	219.1	2600
High-efficiency units 30XW-P/30XHP (option 150)							
512	1743	968	936	3059	168.3	168.3	2800
562	1743	968	936	3059	168.3	168.3	2800
712	1970	1083	1105	3290	219.1	219.1	3100
812	1970	1083	1105	3290	219.1	219.1	3100
862	1970	1083	1105	3290	219.1	219.1	3100

Legend:

All dimensions are in mm.

1 Required clearance for maintenance

2 Recommended clearance for tube removal

Water inlet

Water outlet

Power supply connection

NOTE: Drawings are not contractually binding. Before designing an installation, consult the certified dimensional drawings, available on request.

Dimensions/clearances

30XW--/30XWH- 1002-1552
30XW-P/30XWHP 1012-1162

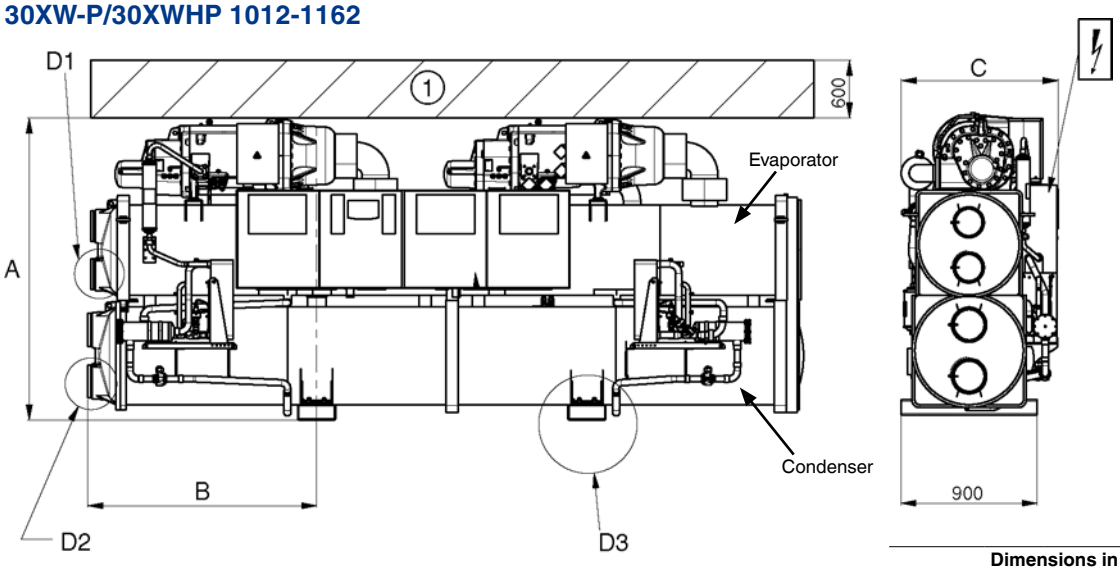

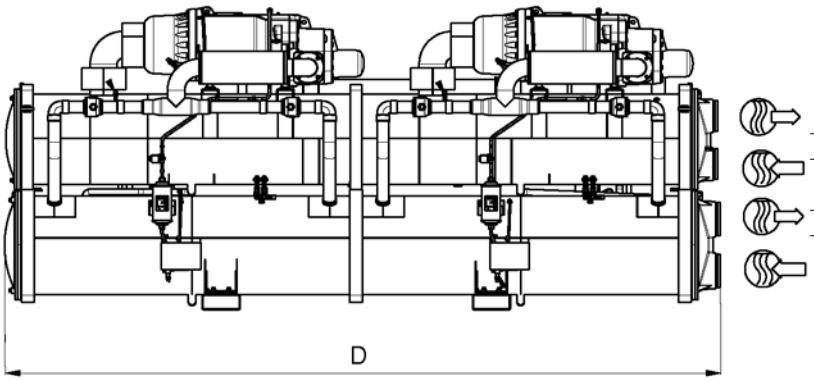

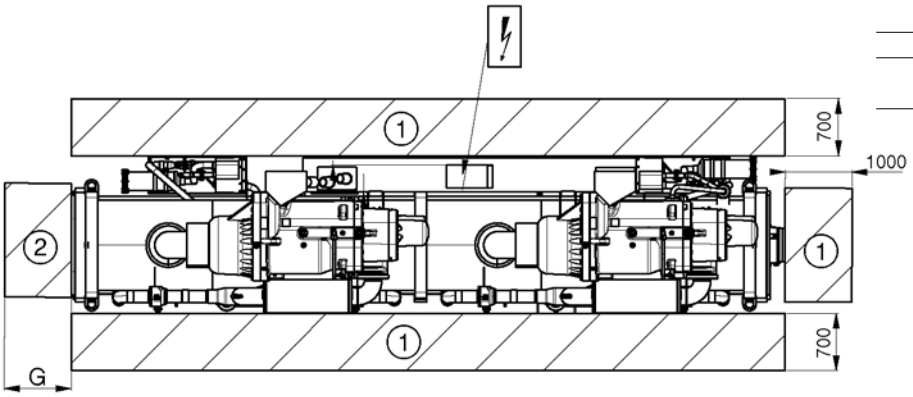

	Dimensions in mm						
	A	B	C	D	E	F	G
Standard-efficiency units 30XW--/30XWH-							
1002	1870	950	1036	4025	219.1	168.3	3800
1052	1870	950	1036	4025	219.1	168.3	3800
1152	1926	950	1036	4025	219.1	219.1	3800
1252	2051	1512	1162	4730	219.1	219.1	4500
1352	2051	1512	1162	4730	219.1	219.1	4500
1452	2051	1512	1162	4730	219.1	219.1	4500
1552	2051	1512	1162	4730	219.1	219.1	4500
High-efficiency units 30XW-P/30XHP							
1012	1997	1512	1039	4730	219.1	219.1	4500
1162	1997	1512	1039	4730	219.1	219.1	4500
Standard-efficiency units 30XW--/30XWH- (option 150)							
1002	1870	950	1036	4025	219.1	168.3	3800
1052	1870	950	1036	4025	219.1	168.3	3800
1152	1926	950	1036	4025	219.1	219.1	3800
1252	2071	1512	1201	4730	219.1	219.1	4500
1352	2071	1512	1201	4730	219.1	219.1	4500
1452	2071	1512	1201	4730	219.1	219.1	4500
1552	2071	1512	1201	4730	219.1	219.1	4500
High-efficiency units 30XW-P/30XHP (option 150)							
1012	1997	1512	1039	4730	219.1	219.1	4500
1162	1997	1512	1039	4730	219.1	219.1	4500

Legend:

All dimensions are in mm.

1 Required clearance for maintenance

2 Recommended clearance for tube removal

Water inlet

Water outlet

Power supply connection

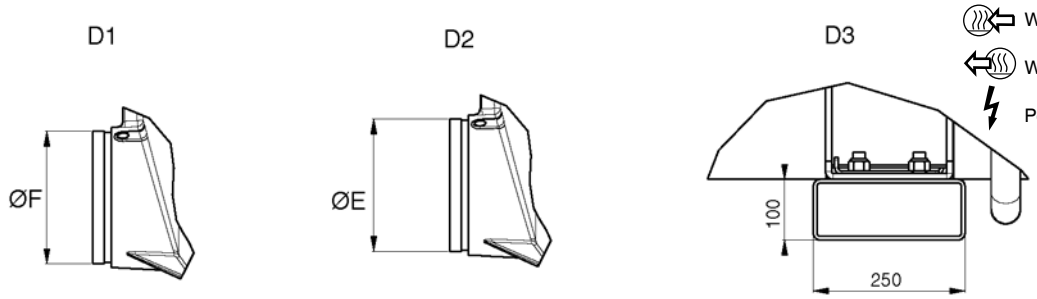

NOTE: Drawings are not contractually binding. Before designing an installation, consult the certified dimensional drawings, available on request.

Dimensions/clearances

30XW--/30XWH- 1652-1702
30XW-P/30XWHP 1312-1762

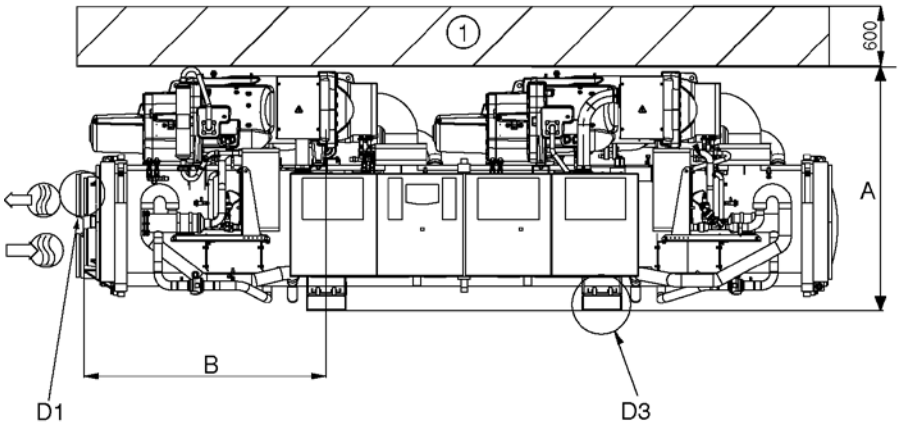

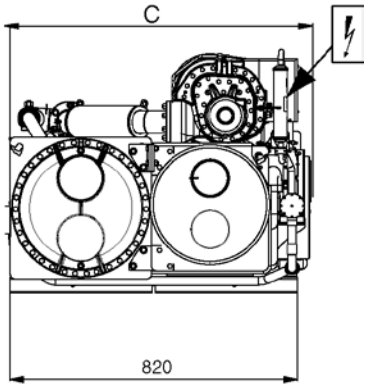

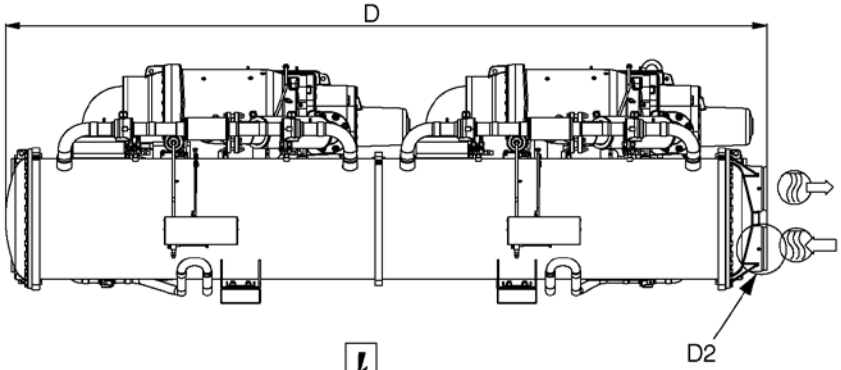

	Dimensions in mm						
	A	B	C	D	E	F	G
Standard-efficiency units 30XW--/30XWH-							
1652	1515	1568	1902	4790	219.1	219.1	4500
1702	1515	1568	1902	4790	219.1	219.1	4500
High-efficiency units 30XW-P/30XHP							
1312	1515	1581	1935	4812	273.0	219.1	4500
1462	1515	1581	1935	4812	273.0	219.1	4500
1612	1562	1591	2129	4832	273.0	273.0	4600
1762	1562	1591	2129	4832	273.0	273.0	4600
Standard-efficiency units 30XW--/30XWH- (option 150)							
1652	1535	1568	1947	4790	219.1	219.1	4500
1702	1535	1568	1947	4790	219.1	219.1	4500
High-efficiency units 30XW-P/30XHP (option 150)							
1312	1535	1581	1980	4812	273.1	219.1	4500
1462	1535	1581	1980	4812	273.1	219.1	4500
1612	1585	1591	2174	4832	273.1	273.1	4600
1762	1585	1591	2174	4832	273.1	273.1	4600

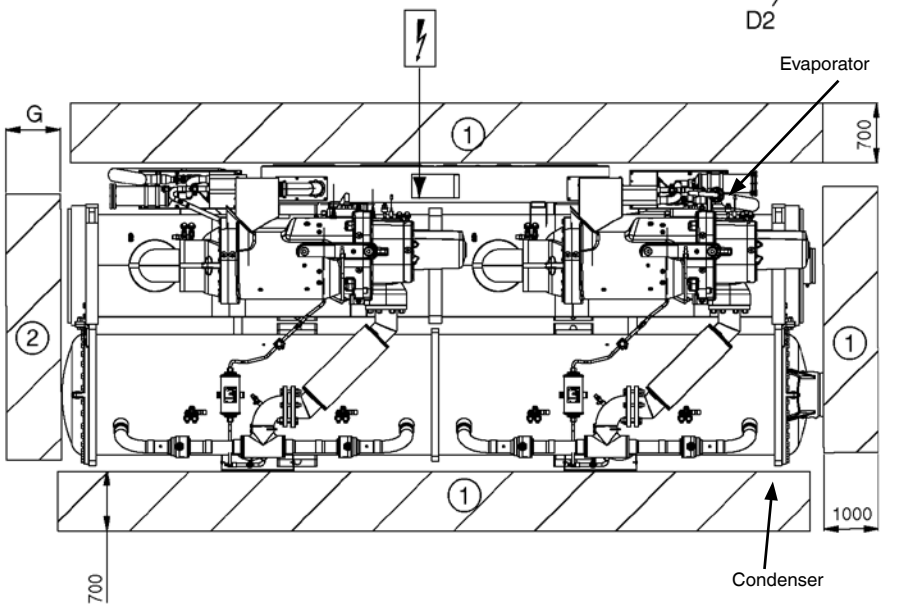

Legend:

All dimensions are in mm.

1 Required clearance for maintenance

2 Recommended clearance for tube removal

Water inlet

Water outlet

Power supply connection

D1

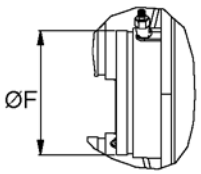

D2

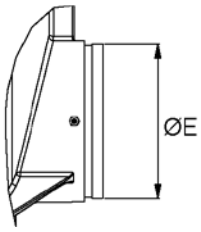

D3

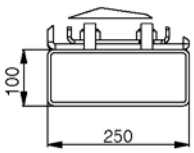

NOTE: Drawings are not contractually binding. Before designing an installation, consult the certified dimensional drawings, available on request.

Cooling capacities in accordance with EN14511-3 : 2011

Standard-efficiency 30XW-- units

		Condenser entering water temperature, °C																			
30XW--	LWT °C	25				30				35				40				45			
		Qc kW	EER kW/kW	q l/s	Δp kPa	Qc kW	EER kW/kW	q l/s	Δp kPa	Qc kW	EER kW/kW	q l/s	Δp kPa	Qc kW	EER kW/kW	q l/s	Δp kPa	Qc kW	EER kW/kW	q l/s	Δp kPa
252	5	268	6.00	13	19	258	5.01	12	18	249	4.19	12	17	238	3.51	11	15	227	2.95	11	15
302		298	5.89	14	23	287	4.92	14	21	276	4.10	13	20	264	3.42	13	18	251	2.86	12	17
352		345	5.73	16	28	334	4.83	16	26	322	4.07	15	25	308	3.43	15	23	295	2.90	14	21
402		444	5.65	21	34	421	4.77	20	30	397	4.00	19	27	372	3.34	18	24	346	2.76	17	21
452		457	5.83	22	33	433	4.89	21	30	408	4.07	19	27	382	3.37	18	24	356	2.78	17	21
552		511	5.65	24	42	486	4.75	23	38	459	3.96	22	34	430	3.28	21	30	400	2.70	19	26
602		514	5.60	25	42	497	4.74	24	40	479	3.99	23	37	459	3.35	22	34	439	2.82	21	31
652		658	5.92	31	41	622	4.94	30	37	584	4.09	28	33	545	3.37	26	29	504	2.75	24	25
702		709	5.82	34	46	670	4.86	32	42	629	4.03	30	37	587	3.32	28	33	543	2.71	26	28
802		755	5.61	36	53	730	4.79	35	50	686	4.00	33	45	640	3.31	31	39	592	2.72	28	34
852		796	5.84	38	56	776	4.98	37	53	745	4.20	36	50	711	3.53	34	46	675	2.95	32	42
1002		986	5.75	47	67	934	4.83	45	61	880	4.03	42	54	824	3.34	39	48	767	2.75	37	42
1052		1027	5.67	49	74	974	4.78	47	67	918	3.99	44	61	860	3.31	41	54	800	2.73	38	47
1152		1104	6.00	53	63	1065	5.07	51	59	1024	4.27	49	55	981	3.58	47	51	936	3.00	45	47
1252		1227	6.28	59	62	1160	5.25	55	55	1091	4.36	52	49	1019	3.60	49	43	945	2.94	45	37
1352		1308	6.07	63	72	1234	5.07	59	65	1159	4.20	55	57	1083	3.47	52	50	1004	2.84	48	44
1452		1416	5.92	68	86	1337	4.95	64	77	1256	4.11	60	68	1172	3.39	56	60	1085	2.77	52	52
1552		1507	5.82	72	100	1424	4.89	68	89	1337	4.07	64	79	1247	3.37	60	69	1153	2.77	55	59
1652		1591	6.22	76	56	1545	5.28	74	53	1483	4.44	71	49	1416	3.72	68	44	1344	3.10	64	40
1702		1658	6.21	79	61	1614	5.31	77	58	1548	4.47	74	53	1476	3.76	71	48	1399	3.14	67	43
252	7	285	6.42	14	21	276	5.35	13	20	265	4.46	13	18	254	3.73	12	17	242	3.13	12	16
302		314	6.20	15	25	306	5.23	15	24	294	4.36	14	22	281	3.63	13	20	268	3.03	13	19
352		368	6.10	18	31	356	5.14	17	29	343	4.33	16	27	329	3.65	16	25	315	3.08	15	24
402		477	6.01	23	38	452	5.09	22	34	427	4.29	20	31	401	3.58	19	27	373	2.97	18	24
452		487	6.17	23	37	466	5.23	22	34	440	4.37	21	31	412	3.63	20	27	384	2.99	18	24
552		524	5.76	25	43	522	5.06	25	43	493	4.23	24	38	463	3.51	22	34	432	2.90	21	30
602		548	5.95	26	48	530	5.04	25	44	510	4.24	24	41	490	3.56	23	38	468	2.99	22	35
652		707	6.30	34	46	668	5.27	32	41	628	4.38	30	37	587	3.61	28	33	544	2.96	26	28
702		756	6.14	36	52	720	5.17	34	47	677	4.30	32	42	632	3.55	30	37	585	2.90	28	32
802		772	5.71	37	55	783	5.08	37	56	736	4.24	35	50	687	3.52	33	44	637	2.90	30	38
852		812	5.94	39	57	826	5.26	40	59	-	-	-	-	758	3.73	36	50	719	3.13	34	46
1002		1059	6.11	51	75	1005	5.15	48	68	948	4.31	45	61	889	3.59	43	55	827	2.96	40	48
1052		1104	6.03	53	84	1047	5.09	50	76	988	4.26	47	68	926	3.54	44	61	863	2.93	41	54
1152		1148	6.22	55	67	1136	5.38	54	66	1092	4.53	52	61	1046	3.80	50	57	998	3.19	48	52
1252		1321	6.70	63	70	1250	5.62	60	63	1176	4.68	56	56	1100	3.87	53	49	1021	3.18	49	43
1352		1407	6.47	67	83	1330	5.42	64	74	1249	4.51	60	66	1167	3.73	56	58	1084	3.06	52	50
1452		1522	6.29	73	98	1439	5.28	69	88	1353	4.40	65	78	1263	3.63	60	68	1170	2.98	56	59
1552		1592	6.08	76	110	1532	5.20	74	102	1440	4.35	69	90	1343	3.61	64	79	1244	2.97	60	68
1652		1643	6.40	79	59	1647	5.59	79	60	1581	4.70	76	55	1511	3.94	72	50	1434	3.29	69	45
1702		1706	6.36	82	64	1721	5.60	82	65	1651	4.73	79	60	1575	3.97	75	54	1493	3.33	71	49
252	10	304	6.85	15	23	302	5.88	14	23	291	4.90	14	21	279	4.09	13	20	266	3.42	13	18
302		322	6.36	15	25	336	5.71	16	27	323	4.75	15	25	309	3.95	15	23	294	3.29	14	22
352		404	6.66	19	36	391	5.62	19	34	377	4.74	18	32	363	3.99	17	30	347	3.36	17	27
402		525	6.52	25	45	503	5.59	24	42	476	4.72	23	37	447	3.96	21	33	417	3.30	20	29
452		506	6.38	24	39	514	5.70	25	41	490	4.83	23	37	460	4.02	22	33	429	3.33	21	29
552		538	5.90	26	44	554	5.33	27	47	548	4.65	26	46	515	3.88	25	41	481	3.21	23	36
602		592	6.38	28	54	582	5.49	28	52	560	4.63	27	49	537	3.89	26	45	514	3.27	25	41
652		743	6.57	36	49	743	5.78	36	49	699	4.82	34	44	654	3.99	31	39	607	3.28	29	34
702		785	6.34	38	54	799	5.65	38	56	752	4.71	36	50	704	3.91	34	44	653	3.21	31	39
802		794	5.84	38	57	819	5.27	39	60	817	4.64	39	60	763	3.85	37	53	708	3.18	34	46
852		830	6.05	40	58	869	5.49	42	63	870	4.80	42	63	831	4.04	40	58	790	3.39	38	53
1002		1139	6.48	55	84	1117	5.64	54	81	1055	4.74	51	73	991	3.96	48	65	924	3.28	44	58
1052		1189	6.40	57	94	1164	5.57	56	90	1100	4.68	53	82	1033	3.91	50	73	964	3.24	46	64
1152		1189	6.42	57	70	1221	5.75	59	74	1201	4.95	58	72	1149	4.16	55	66	1095	3.49	53	61
1252		1446	7.23	69	82	1392	6.18	67	77	1312	5.17	63	68	1229	4.29	59	60	1143	3.54	55	52
1352		1564	7.06	75	100	1480	5.95	71	90	1393	4.97	67	80	1302	4.12	62	70	1209	3.39	58	61
1452		1656	6.72	80	114	1601	5.77	77	107	1508	4.83	72	95	1409	4.00	68	83	1307	3.29	63	72
1552		1670	6.32	80	118	1677	5.60	81	119	1602	4.76	77	109	1498	3.97	72	96	1389	3.28	67	83
1652		1709	6.61	82	63	1754	5.89	84	67	1735	5.09	83	65	1658	4.27	79	60	1575	3.57	75	54
1702		1778	6.58	85	68	1823	5.86	87	72	1811	5.10	87	71	1728	4.29	83	65	1640	3.61	79	58

Legend
LWT Leaving water temperature, °C
Qc Cooling capacity, kW
EER Energy efficiency ratio, kW/kW
q Evaporator water flow rate, l/s
Δp Evaporator pressure drop, kPa

Application data
Standard units, refrigerant: R-134a
Evaporator and condenser entering/leaving water temperature difference: 5 K
Evaporator and condenser fluid: water
Fouling factor: 0.18 x 10^{-4} (m^2 K)/W

Performances in accordance with EN14511-3:2011.

Cooling capacities in accordance with EN14511-3 : 2011

Standard-efficiency 30XW-- units (continued)

		Condenser entering water temperature, °C																			
30XW--	LWT °C	25				30				35				40				45			
		Qc kW	EER kW/kW	q l/s	Δp kPa	Qc kW	EER kW/kW	q l/s	Δp kPa	Qc kW	EER kW/kW	q l/s	Δp kPa	Qc kW	EER kW/kW	q l/s	Δp kPa	Qc kW	EER kW/kW	q l/s	Δp kPa
252	15	330	7.45	16	26	333	6.44	16	26	336	5.62	16	27	322	4.67	15	25	307	3.90	15	23
302		343	6.76	16	28	352	5.97	17	29	370	5.41	18	32	357	4.53	17	30	340	3.76	16	27
352		429	7.05	21	39	443	6.29	21	41	438	5.42	21	40	421	4.56	20	37	403	3.85	19	35
402		561	6.88	27	50	561	6.12	27	50	564	5.47	27	50	532	4.62	26	45	498	3.87	24	40
452		533	6.67	26	42	543	5.99	26	44	557	5.41	27	46	548	4.70	26	45	512	3.92	25	39
552		561	6.11	27	47	577	5.51	28	50	600	5.03	29	53	612	4.52	29	56	573	3.76	28	49
602		615	6.60	30	57	641	6.00	31	61	652	5.34	31	63	626	4.50	30	59	597	3.78	29	54
652		789	6.91	38	54	806	6.18	39	56	823	5.54	40	58	777	4.65	37	52	723	3.84	35	46
702		828	6.61	40	58	853	5.95	41	62	876	5.36	42	65	835	4.52	40	59	776	3.73	37	52
802		830	6.04	40	60	854	5.46	41	63	888	4.97	43	68	906	4.46	44	70	841	3.70	40	61
852		860	6.24	41	60	902	5.67	43	65	953	5.18	46	72	963	4.57	46	73	915	3.84	44	67
1002		1223	6.86	59	93	1228	6.09	59	94	1242	5.44	60	96	1179	4.61	57	87	1102	3.84	53	77
1052		1273	6.75	61	103	1280	6.00	62	104	1300	5.38	63	107	1229	4.55	59	97	1149	3.80	55	86
1152		1255	6.74	60	76	1294	6.06	62	80	1336	5.46	64	85	1339	4.79	64	85	1276	4.02	61	78
1252		1592	7.81	77	97	1576	6.85	76	95	1555	5.98	75	92	1467	5.03	71	83	1368	4.17	66	72
1352		1734	7.65	84	119	1721	6.72	83	117	1659	5.77	80	109	1554	4.82	75	96	1444	3.98	70	83
1452		1803	7.17	87	131	1802	6.32	87	131	1789	5.55	86	129	1678	4.65	81	114	1562	3.86	75	99
1552		1791	6.66	86	132	1811	5.94	87	135	1829	5.30	88	138	1780	4.58	86	131	1656	3.82	80	114
1652		1812	6.94	87	70	1865	6.19	90	74	1938	5.56	93	80	1924	4.82	93	79	1827	4.04	88	71
1702		1885	6.89	91	75	1929	6.14	93	79	2002	5.53	96	85	2008	4.85	97	85	1904	4.08	92	77
252	18	352	7.95	17	28	351	6.79	17	28	358	5.96	17	29	350	5.05	17	28	333	4.20	16	26
302		358	7.06	17	29	365	6.17	18	30	380	5.55	18	33	389	4.91	19	34	370	4.08	18	31
352		449	7.34	22	41	455	6.43	22	42	472	5.78	23	45	458	4.91	22	43	439	4.14	21	40
402		582	7.08	28	53	579	6.28	28	52	587	5.64	28	53	590	5.04	28	54	551	4.23	27	47
452		546	6.82	26	44	559	6.13	27	46	573	5.54	28	48	591	5.03	28	51	567	4.29	27	47
552		576	6.25	28	49	593	5.64	29	51	615	5.14	30	55	640	4.70	31	60	633	4.12	30	58
602		630	6.75	30	59	653	6.10	31	63	686	5.58	33	69	683	4.88	33	68	652	4.11	31	63
652		817	7.11	39	56	833	6.35	40	59	853	5.70	41	61	858	5.06	41	62	799	4.19	38	54
702		855	6.78	41	61	876	6.09	42	64	902	5.49	43	67	923	4.93	44	70	859	4.08	41	62
802		851	6.17	41	62	874	5.57	42	65	909	5.07	44	70	952	4.65	46	76	929	4.03	45	73
852		881	6.37	42	62	918	5.76	44	67	972	5.26	47	74	1025	4.82	49	81	998	4.13	48	77
1002		1269	7.06	61	98	1281	6.30	62	100	1298	5.64	63	102	1304	5.02	63	103	1222	4.21	59	92
1052		1318	6.94	64	109	1333	6.20	64	111	1356	5.57	65	114	1359	4.95	66	115	1272	4.15	61	102
1152		1298	6.94	63	79	1332	6.22	64	83	1382	5.63	67	89	1433	5.09	69	95	1394	4.36	67	90
1252		1674	8.11	81	105	1661	7.13	80	104	1657	6.29	80	103	1618	5.45	78	98	1510	4.55	73	86
1352		1822	7.93	88	129	1815	7.00	88	128	1805	6.16	87	127	1714	5.23	83	114	1597	4.35	77	100
1452		1883	7.40	91	140	1894	6.57	92	142	1907	5.83	92	144	1852	5.03	89	136	1724	4.19	83	118
1552		1870	6.88	90	142	1877	6.11	91	143	1910	5.48	92	148	1940	4.90	94	152	1826	4.14	88	135
1652		1872	7.12	90	73	1930	6.36	93	78	2015	5.74	97	85	2079	5.13	100	91	1988	4.33	96	83
1702		1942	7.06	94	79	2000	6.32	96	83	2080	5.69	100	90	2152	5.13	104	97	2073	4.37	100	90

Legend
LWT Leaving water temperature, °C
Qc Cooling capacity, kW
EER Energy efficiency ratio, kW/kW
q Evaporator water flow rate, l/s
Δp Evaporator pressure drop, kPa

Application data
Standard units, refrigerant: R-134a
Evaporator and condenser entering/leaving water temperature difference: 5 K
Evaporator and condenser fluid: water
Fouling factor: 0.18 x 10^{-4} (m^2 K)/W

Performances in accordance with EN14511-3:2011.

Cooling capacities

Standard-efficiency 30XW-- units

		Condenser entering water temperature, °C																			
30XW--	LWT °C	25				30				35				40				45			
		Qc kW	EER kW/kW	q l/s	Δp kPa	Qc kW	EER kW/kW	q l/s	Δp kPa	Qc kW	EER kW/kW	q l/s	Δp kPa	Qc kW	EER kW/kW	q l/s	Δp kPa	Qc kW	EER kW/kW	q l/s	Δp kPa
252	5	268	6.23	13	19	259	5.17	12	18	249	4.31	12	17	238	3.59	11	15	227	3.00	11	15
302		299	6.14	14	23	288	5.09	14	21	277	4.22	13	20	264	3.51	13	18	251	2.92	12	17
352		346	6.00	16	28	335	5.02	16	26	322	4.21	15	25	309	3.53	15	23	295	2.97	14	21
402		445	5.89	21	34	422	4.93	20	30	398	4.12	19	27	373	3.41	18	24	347	2.81	17	21
452		458	6.08	22	33	434	5.06	21	30	409	4.19	19	27	383	3.45	18	24	356	2.83	17	21
552		513	5.93	24	42	488	4.94	23	38	460	4.09	22	34	431	3.37	21	30	401	2.76	19	26
602		516	5.89	25	42	498	4.94	24	40	480	4.13	23	37	461	3.45	22	34	440	2.88	21	31
652		660	6.22	31	41	623	5.14	30	37	585	4.22	28	33	546	3.46	26	29	505	2.81	24	25
702		711	6.14	34	46	672	5.07	32	42	631	4.17	30	37	589	3.41	28	33	544	2.77	26	28
802		758	5.94	36	53	732	5.03	35	50	688	4.16	33	45	642	3.41	31	39	593	2.79	28	34
852		799	6.13	38	56	779	5.19	37	53	747	4.35	36	50	714	3.63	34	46	677	3.02	32	42
1002		990	6.08	47	67	938	5.06	45	61	883	4.18	42	54	827	3.44	39	48	769	2.82	37	42
1052		1032	6.04	49	74	978	5.02	47	67	922	4.15	44	61	863	3.41	41	54	803	2.80	38	47
1152		1108	6.33	53	63	1069	5.30	51	59	1028	4.43	49	55	984	3.69	47	51	939	3.08	45	47
1252		1232	6.61	59	62	1164	5.47	55	55	1094	4.50	52	49	1022	3.69	49	43	947	3.00	45	37
1352		1314	6.43	63	72	1240	5.31	59	65	1163	4.36	55	57	1087	3.57	52	50	1007	2.91	48	44
1452		1423	6.32	68	86	1344	5.21	64	77	1262	4.28	60	68	1176	3.50	56	60	1089	2.84	52	52
1552		1517	6.26	72	100	1432	5.18	68	89	1343	4.26	64	79	1252	3.49	60	69	1158	2.85	55	59
1652		1597	6.55	76	56	1550	5.52	74	53	1488	4.60	71	49	1420	3.83	68	44	1348	3.18	64	40
1702		1664	6.56	79	61	1620	5.56	77	58	1553	4.65	74	53	1481	3.87	71	48	1403	3.22	67	43
252	7	286	6.70	14	21	276	5.54	13	20	266	4.60	13	18	254	3.83	12	17	242	3.19	12	16
302		315	6.50	15	25	307	5.44	15	24	295	4.50	14	22	282	3.73	13	20	268	3.10	13	19
352		369	6.42	18	31	357	5.37	17	29	344	4.49	16	27	330	3.76	16	25	316	3.16	15	24
402		478	6.31	23	38	454	5.30	22	34	428	4.42	20	31	402	3.67	19	27	374	3.04	18	24
452		488	6.47	23	37	467	5.44	22	34	441	4.51	21	31	413	3.72	20	27	385	3.05	18	24
552		525	6.06	25	43	524	5.30	25	43	495	4.39	24	38	464	3.62	22	34	433	2.97	21	30
602		550	6.30	26	48	532	5.28	25	44	512	4.41	24	41	491	3.68	23	38	469	3.08	22	35
652		709	6.67	34	46	670	5.52	32	41	630	4.54	30	37	588	3.72	28	33	545	3.03	26	28
702		759	6.53	36	52	722	5.43	34	47	679	4.48	32	42	634	3.66	30	37	587	2.98	28	32
802		775	6.06	37	55	786	5.37	37	56	739	4.44	35	50	690	3.65	33	44	639	2.99	30	38
852		815	6.24	39	57	829	5.51	40	59	-	-	-	-	760	3.85	36	50	722	3.21	34	46
1002		1065	6.53	51	75	1009	5.43	48	68	952	4.50	45	61	892	3.71	43	55	830	3.04	40	48
1052		1110	6.49	53	84	1052	5.40	50	76	992	4.46	47	68	930	3.68	44	61	866	3.02	41	54
1152		1153	6.59	55	67	1141	5.66	54	66	1097	4.73	52	61	1050	3.94	50	57	1001	3.28	48	52
1252		1327	7.12	63	70	1255	5.90	60	63	1181	4.86	56	56	1104	3.99	53	49	1024	3.25	49	43
1352		1415	6.92	67	83	1336	5.72	64	74	1254	4.70	60	66	1172	3.85	56	58	1087	3.14	52	50
1452		1532	6.79	73	98	1447	5.60	69	88	1360	4.61	65	78	1269	3.77	60	68	1175	3.06	56	59
1552		1603	6.60	76	110	1541	5.57	74	102	1448	4.59	69	90	1350	3.76	64	79	1250	3.07	60	68
1652		1650	6.76	79	59	1654	5.88	79	60	1587	4.90	76	55	1516	4.07	72	50	1439	3.38	69	45
1702		1713	6.75	82	64	1728	5.91	82	65	1657	4.94	79	60	1581	4.12	75	54	1498	3.43	71	49
252	10	304	7.19	15	23	303	6.13	14	23	292	5.07	14	21	279	4.21	13	20	266	3.50	13	18
302		323	6.68	15	25	337	5.98	16	27	324	4.93	15	25	309	4.08	15	23	294	3.38	14	22
352		405	7.09	19	36	393	5.92	19	34	378	4.95	18	32	363	4.14	17	30	348	3.47	17	27
402		527	6.91	25	45	505	5.87	24	42	477	4.91	23	37	448	4.09	21	33	419	3.38	20	29
452		507	6.72	24	39	515	5.98	25	41	491	5.02	23	37	461	4.15	22	33	430	3.41	21	29
552		540	6.22	26	44	556	5.61	27	47	550	4.86	26	46	517	4.02	25	41	483	3.30	23	36
602		594	6.81	28	54	584	5.81	28	52	562	4.85	27	49	539	4.05	26	45	515	3.38	25	41
652		746	7.00	36	49	745	6.11	36	49	701	5.04	34	44	656	4.14	31	39	609	3.37	29	34
702		788	6.77	38	54	802	6.00	38	56	755	4.95	36	50	706	4.06	34	44	655	3.31	31	39
802		797	6.22	38	57	822	5.60	39	60	821	4.90	39	60	766	4.02	37	53	710	3.29	34	46
852		834	6.38	40	58	873	5.79	42	63	874	5.03	42	63	835	4.20	40	58	793	3.50	38	53
1002		1145	7.00	55	84	1123	6.03	54	81	1060	5.00	51	73	995	4.13	48	65	928	3.39	44	58
1052		1196	6.97	57	94	1171	5.99	56	90	1106	4.97	53	82	1038	4.10	50	73	968	3.37	46	64
1152		1195	6.83	57	70	1227	6.10	59	74	1206	5.21	58	72	1154	4.34	55	66	1100	3.61	53	61
1252		1453	7.78	69	82	1399	6.57	67	77	1318	5.42	63	68	1234	4.46	59	60	1147	3.64	55	52
1352		1573	7.68	75	100	1489	6.36	71	90	1400	5.24	67	80	1308	4.30	62	70	1214	3.50	58	61
1452		1667	7.37	80	114	1611	6.22	77	107	1517	5.13	72	95	1417	4.20	68	83	1313	3.41	63	72
1552		1682	6.92	80	118	1689	6.07	81	119	1613	5.09	77	109	1507	4.18	72	96	1397	3.42	67	83
1652		1716	7.02	82	63	1762	6.24	84	67	1743	5.35	83	65	1664	4.45	79	60	1580	3.69	75	54
1702		1785	7.01	85	68	1831	6.23	87	72	1819	5.38	87	71	1736	4.48	83	65	1646	3.74	79	58

Legend
LWT Leaving water temperature, °C
Qc Cooling capacity, kW
EER Energy efficiency ratio, kW/kW
q Evaporator water flow rate, l/s
Δp Evaporator pressure drop, kPa

Application data
Standard units, refrigerant: R-134a
Evaporator and condenser entering/leaving water temperature difference: 5 K
Evaporator and condenser fluid: water
Fouling factor: 0.18 x 10^{-4} (m^2 K)/W

Gross performances, not in accordance with EN14511-3:2011. These performances do not take into account the correction for the proportional heating capacity and power input generated by the water pump to overcome the internal pressure drop in the heat exchanger.

Cooling capacities

Standard-efficiency 30XW-- units (continued)

		Condenser entering water temperature, °C																			
30XW--	LWT °C	25				30				35				40				45			
		Qc kW	EER kW/kW	q l/s	Δp kPa	Qc kW	EER kW/kW	q l/s	Δp kPa	Qc kW	EER kW/kW	q l/s	Δp kPa	Qc kW	EER kW/kW	q l/s	Δp kPa	Qc kW	EER kW/kW	q l/s	Δp kPa
252	15	331	7.88	16	26	333	6.77	16	26	337	5.88	16	27	323	4.85	15	25	308	4.02	15	23
302		344	7.13	16	28	353	6.28	17	29	371	5.68	18	32	358	4.72	17	30	341	3.89	16	27
352		431	7.57	21	39	444	6.72	21	41	439	5.74	21	40	422	4.79	20	37	404	4.01	19	35
402		563	7.35	27	50	563	6.50	27	50	566	5.77	27	50	534	4.83	26	45	500	4.01	24	40
452		534	7.06	26	42	545	6.32	26	44	559	5.69	27	46	549	4.92	26	45	514	4.06	25	39
552		563	6.47	27	47	579	5.82	28	50	602	5.31	29	53	615	4.76	29	56	575	3.92	28	49
602		617	7.08	30	57	643	6.42	31	61	655	5.69	31	63	628	4.74	30	59	600	3.94	29	54
652		792	7.41	38	54	809	6.60	39	56	826	5.89	40	58	780	4.88	37	52	725	3.99	35	46
702		831	7.11	40	58	856	6.38	41	62	880	5.72	42	65	838	4.77	40	59	779	3.89	37	52
802		833	6.48	40	60	858	5.83	41	63	892	5.30	43	68	910	4.74	44	70	845	3.88	40	61
852		864	6.60	41	60	906	5.99	43	65	958	5.48	46	72	968	4.81	46	73	919	4.00	44	67
1002		1231	7.50	59	93	1235	6.60	59	94	1249	5.87	60	96	1186	4.90	57	87	1108	4.03	53	77
1052		1281	7.45	61	103	1288	6.56	62	104	1309	5.85	63	107	1236	4.86	59	97	1155	4.00	55	86
1152		1261	7.23	60	76	1301	6.48	62	80	1343	5.82	64	85	1346	5.08	64	85	1282	4.22	61	78
1252		1601	8.53	77	97	1585	7.40	76	95	1564	6.40	75	92	1474	5.31	71	83	1374	4.35	66	72
1352		1746	8.50	84	119	1732	7.37	83	117	1670	6.22	80	109	1563	5.11	75	96	1452	4.17	70	83
1452		1817	8.00	87	131	1816	6.97	87	131	1803	6.05	86	129	1689	4.97	81	114	1572	4.06	75	99
1552		1806	7.40	86	132	1825	6.54	87	135	1844	5.79	88	138	1794	4.94	86	131	1667	4.05	80	114
1652		1820	7.43	87	70	1873	6.60	90	74	1947	5.93	93	80	1933	5.10	93	79	1835	4.23	88	71
1702		1893	7.41	91	75	1938	6.57	93	79	2013	5.91	96	85	2018	5.15	97	85	1914	4.28	92	77
252	18	353	8.47	17	28	352	7.18	17	28	359	6.26	17	29	351	5.27	17	28	334	4.36	16	26
302		359	7.48	17	29	366	6.51	18	30	381	5.85	18	33	390	5.16	19	34	371	4.25	18	31
352		450	7.93	22	41	456	6.90	22	42	474	6.18	23	45	460	5.20	22	43	440	4.34	21	40
402		584	7.60	28	53	582	6.69	28	52	589	5.98	28	53	592	5.32	28	54	553	4.42	27	47
452		548	7.24	26	44	560	6.49	27	46	575	5.85	28	48	594	5.29	28	51	569	4.48	27	47
552		578	6.64	28	49	595	5.98	29	51	617	5.43	30	55	643	4.97	31	60	636	4.33	30	58
602		633	7.27	30	59	656	6.55	31	63	689	5.99	33	69	686	5.20	33	68	655	4.32	31	63
652		820	7.66	39	56	837	6.81	40	59	856	6.09	41	61	862	5.37	41	62	802	4.39	38	54
702		859	7.33	41	61	880	6.55	42	64	906	5.89	43	67	927	5.26	44	70	863	4.30	41	62
802		854	6.64	41	62	878	5.96	42	65	914	5.42	44	70	957	4.97	46	76	934	4.27	45	73
852		885	6.75	42	62	923	6.10	44	67	977	5.58	47	74	1031	5.11	49	81	1003	4.35	48	77
1002		1276	7.77	61	98	1289	6.88	62	100	1306	6.13	63	102	1312	5.41	63	103	1229	4.47	59	92
1052		1327	7.71	64	109	1342	6.83	64	111	1365	6.09	65	114	1369	5.37	66	115	1281	4.43	61	102
1152		1304	7.48	63	79	1339	6.67	64	83	1390	6.02	67	89	1442	5.44	69	95	1401	4.61	67	90
1252		1684	8.95	81	105	1671	7.78	80	104	1667	6.80	80	103	1627	5.83	78	98	1518	4.79	73	86
1352		1835	8.92	88	129	1828	7.76	88	128	1819	6.75	87	127	1726	5.63	83	114	1606	4.60	77	100
1452		1899	8.34	91	140	1910	7.32	92	142	1923	6.44	92	144	1866	5.47	89	136	1737	4.47	83	118
1552		1886	7.72	90	142	1893	6.77	91	143	1927	6.03	92	148	1957	5.37	94	152	1841	4.45	88	135
1652		1880	7.66	90	73	1939	6.82	93	78	2025	6.15	97	85	2090	5.48	100	91	1998	4.57	96	83
1702		1951	7.62	94	79	2010	6.80	96	83	2091	6.12	100	90	2164	5.50	104	97	2084	4.63	100	90

Legend
LWT Leaving water temperature, °C
Qc Cooling capacity, kW
EER Energy efficiency ratio, kW/kW
q Evaporator water flow rate, l/s
Δp Evaporator pressure drop, kPa

Application data
Standard units, refrigerant: R-134a
Evaporator and condenser entering/leaving water temperature difference: 5 K
Evaporator and condenser fluid: water
Fouling factor: 0.18 x 10^{-4} (m^2 K)/W

Gross performances, not in accordance with EN14511-3:2011. These performances do not take into account the correction for the proportional heating capacity and power input generated by the water pump to overcome the internal pressure drop in the heat exchanger.

Heating capacities in accordance with EN14511-3 : 2011

Standard-efficiency 30XWH- units

		Evaporator entering water temperature, °C															
30XWH-	LWT °C	8				10				15				18			
		Qh kW	COP kW/kW	q l/s	Δp kPa	Qh kW	COP kW/kW	q l/s	Δp kPa	Qh kW	COP kW/kW	q l/s	Δp kPa	Qh kW	COP kW/kW	q l/s	Δp kPa
252	30	311	6.81	15	35	329	7.19	16	39	358	7.81	17	45	376	8.16	18	49
302		348	6.70	17	43	365	6.99	17	47	381	7.26	18	50	398	7.55	19	54
352		406	6.52	19	53	429	6.84	21	59	478	7.49	23	71	494	7.70	24	75
402		521	6.37	25	43	554	6.67	27	48	619	7.19	30	57	644	7.38	31	61
452		534	6.54	26	44	564	6.83	27	48	598	7.13	29	53	619	7.31	30	56
552		600	6.33	29	53	614	6.43	29	55	640	6.63	31	60	654	6.74	31	62
602		606	6.30	29	55	641	6.58	31	60	694	6.98	33	69	713	7.11	34	72
652		765	6.59	37	56	815	6.90	39	62	879	7.28	42	70	910	7.45	44	74
702		826	6.47	40	63	875	6.74	42	69	929	7.01	44	77	957	7.15	46	80
802		886	6.25	42	72	906	6.34	43	74	949	6.54	45	80	973	6.64	47	84
852		930	6.46	45	41	947	6.54	45	43	983	6.72	47	46	998	6.80	48	47
1002		1151	6.31	55	55	1226	6.58	59	62	1343	6.95	64	75	1408	7.14	67	82
1052		1202	6.21	58	62	1280	6.46	61	70	1407	6.83	67	85	1464	6.97	70	92
1152		1282	6.55	61	47	1328	6.72	64	50	1407	7.01	67	55	1448	7.16	69	58
1252		1415	6.78	68	42	1509	7.08	72	47	1699	7.59	81	57	1795	7.81	86	63
1352		1516	6.53	73	49	1617	6.80	77	54	1853	7.32	89	68	1956	7.50	94	75
1452		1645	6.32	79	57	1753	6.56	84	63	1952	6.91	93	76	2052	7.05	98	83
1552		1755	6.16	84	64	1843	6.33	88	70	1988	6.56	95	80	2064	6.67	99	85
1652		1837	6.73	88	50	1893	6.87	91	53	2010	7.14	96	59	2082	7.29	100	64
1702		1915	6.70	92	54	1968	6.81	94	57	2089	7.06	100	64	2163	7.20	103	68
252	35	309	5.88	15	34	326	6.19	16	37	369	6.95	18	46	384	7.20	18	50
302		346	5.78	17	41	364	6.06	17	45	402	6.59	19	54	414	6.77	20	57
352		403	5.68	19	52	425	5.96	20	57	486	6.66	23	71	513	6.94	25	79
402		507	5.58	24	40	539	5.85	26	45	627	6.53	30	57	652	6.70	31	61
452		520	5.69	25	41	553	5.98	27	45	614	6.49	29	54	635	6.64	30	57
552		587	5.53	28	50	623	5.79	30	56	666	6.08	32	62	684	6.19	33	65
602		602	5.52	29	53	635	5.77	30	58	726	6.39	35	72	745	6.52	36	76
652		743	5.71	36	52	791	6.00	38	57	903	6.60	43	72	936	6.76	45	76
702		804	5.62	38	59	854	5.88	41	65	963	6.39	46	80	996	6.53	48	84
802		878	5.53	42	69	933	5.76	45	76	991	6.01	47	85	1014	6.10	49	88
852		928	5.70	45	40	980	5.93	47	45	1036	6.17	50	50	1061	6.27	51	52
1002		1121	5.53	54	51	1192	5.78	57	58	1372	6.33	66	76	1429	6.49	68	83
1052		1171	5.45	56	58	1246	5.69	60	65	1436	6.22	69	86	1494	6.36	71	93
1152		1268	5.74	61	45	1339	5.99	64	49	1458	6.38	70	57	1507	6.54	72	61
1252		1374	5.91	66	39	1464	6.20	70	43	1702	6.84	82	56	1801	7.05	86	62
1352		1472	5.71	71	45	1567	5.97	75	50	1829	6.56	88	66	1966	6.80	94	74
1452		1599	5.54	77	53	1702	5.77	82	59	1976	6.27	95	76	2078	6.42	99	83
1552		1704	5.44	82	60	1814	5.65	87	67	2023	5.98	97	80	2108	6.10	101	86
1652		1826	5.93	88	49	1930	6.16	93	54	2099	6.49	101	63	2166	6.61	104	67
1702		1907	5.93	91	53	2016	6.14	97	58	2181	6.44	104	68	2244	6.55	107	71
252	40	306	5.09	15	33	323	5.35	16	36	366	6.00	18	45	394	6.39	19	51
302		343	5.00	16	40	361	5.24	17	44	410	5.83	20	55	439	6.19	21	62
352		400	4.97	19	50	422	5.20	20	55	481	5.80	23	69	518	6.15	25	78
402		494	4.87	24	38	525	5.12	25	42	609	5.75	29	54	664	6.11	32	62
452		506	4.94	24	38	538	5.20	26	42	624	5.86	30	55	657	6.08	32	59
552		572	4.81	27	47	607	5.04	29	52	699	5.61	34	66	718	5.72	34	69
602		598	4.84	29	51	630	5.06	30	56	717	5.61	34	69	774	5.95	37	79
652		722	4.94	35	49	767	5.19	37	54	890	5.82	43	69	967	6.16	46	79
702		781	4.87	37	55	829	5.10	40	61	960	5.67	46	78	1036	5.98	50	88
802		853	4.81	41	65	905	5.02	43	71	1036	5.53	50	89	1063	5.62	51	93
852		919	5.00	44	38	968	5.20	46	43	1103	5.70	53	55	1131	5.79	54	58
1002		1092	4.82	52	48	1160	5.05	56	54	1347	5.62	65	72	1462	5.92	70	84
1052		1141	4.76	55	54	1212	4.98	58	61	1407	5.53	67	81	1533	5.82	73	96
1152		1257	5.03	60	43	1325	5.25	64	47	1511	5.81	73	60	1576	5.99	76	64
1252		1334	5.13	64	36	1420	5.39	68	40	1653	6.03	79	52	1804	6.36	87	61
1352		1428	4.96	69	42	1519	5.21	73	47	1767	5.78	85	61	1933	6.09	93	71
1452		1553	4.84	75	49	1651	5.06	79	55	1919	5.57	92	71	2097	5.83	101	83
1552		1654	4.77	79	56	1759	4.97	84	62	2042	5.43	98	80	2169	5.60	104	89
1652		1805	5.19	87	47	1905	5.40	91	52	2169	5.88	104	66	2276	6.04	109	72
1702		1883	5.20	90	50	1987	5.40	95	56	2264	5.86	109	71	2356	5.99	113	77
252	45	304	4.44	15	32	320	4.65	15	35	362	5.19	17	43	389	5.51	19	49
302		340	4.35	16	39	358	4.55	17	42	405	5.04	19	52	435	5.36	21	59
352		398	4.35	19	48	419	4.55	20	53	476	5.07	23	66	512	5.37	25	75
402		481	4.24	23	35	510	4.46	25	39	591	5.03	28	50	644	5.37	31	58
452		494	4.28	24	36	524	4.51	25	40	606	5.10	29	51	661	5.45	32	59
552		559	4.17	27	45	592	4.38	28	49	683	4.91	33	62	744	5.24	36	72
602		596	4.24	29	50	626	4.43	30	54	709	4.91	34	67	763	5.22	37	76
652		702	4.26	34	45	744	4.48	36	50	860	5.05	41	64	937	5.38	45	73
702		759	4.20	37	52	805	4.41	39	57	929	4.93	45	72	1012	5.24	49	83
802		828	4.18	40	60	877	4.37	42	66	1012	4.85	49	84	1102	5.15	53	97
852		909	4.38	44	37	956	4.56	46	41	1085	5.00	52	52	1168	5.26	56	61
1002		1064	4.20	51	44	1129	4.41	54	50	1306	4.93	63	66	1425	5.24	68	79
1052		1113	4.15	54	50	1180	4.35	57	56	1365	4.86	66	75	1488	5.15	71	89
1152		1247	4.41	60	42	1312	4.60	63	46	1489	5.10	72	57	1607	5.40	77	65
1252		1296	4.44	62	34	1377	4.68	66	37	1598	5.26	77	48	1746	5.60	84	56
1352		1387	4.30	67	39	1473	4.52	71	43	1707	5.06	82	56	1864	5.36	90	65
1452		1509	4.21	73	46	1602	4.41	77	51	1855	4.89	89	66	2023	5.16	97	76
1552		1607	4.17	77	52	1705	4.35	82	58	1973	4.80	95	74	2152	5.04	103	86
1652		1785	4.54	86	45	1881	4.73	90	49	2138	5.17	103	63	2306	5.41	111	73
1702		1858	4.57	89	48	1959	4.75	94	53	2228	5.17	107	68	2405	5.41	115	78

Legend
LWT Leaving water temperature, °C
Qh Heating capacity, kW
COP Coefficient of performance, kW/kW
q Condenser water flow rate, l/s
Δp Condenser pressure drop, kPa

Application data
Standard units, refrigerant: R-134a
Evaporator entering/leaving water temperature difference: 3 K
Condenser entering/leaving water temperature difference: 5 K for LWT values <55°C, 8 K for values = 55°C, 10 K for LWT values >55°C
Evaporator and condenser fluid: water
Fouling factor: 0.18 x 10^{-4} (m^2 K)/W

Performances in accordance with EN14511-3:2011.

Heating capacities in accordance with EN14511-3 : 2011

Standard-efficiency 30XWH- units (continued)

		Evaporator entering water temperature, °C															
30XWH-	LWT °C	8				10				15				18			
		Qh kW	COP kW/kW	q l/s	Δp kPa	Qh kW	COP kW/kW	q l/s	Δp kPa	Qh kW	COP kW/kW	q l/s	Δp kPa	Qh kW	COP kW/kW	q l/s	Δp kPa
252	50	302	3.89	15	31	317	4.06	15	33	358	4.52	17	41	384	4.78	18	47
302		337	3.80	16	37	355	3.97	17	41	400	4.38	19	50	429	4.65	21	57
352		396	3.84	19	47	416	4.01	20	52	471	4.45	23	64	506	4.71	24	73
402		469	3.70	23	33	496	3.89	24	37	573	4.39	28	47	623	4.70	30	54
452		481	3.71	23	34	510	3.91	25	37	588	4.43	28	47	639	4.74	31	55
552		546	3.63	26	42	577	3.81	28	46	663	4.28	32	58	721	4.57	35	67
602		594	3.74	29	49	623	3.90	30	53	702	4.31	34	65	754	4.58	36	73
652		682	3.67	33	43	722	3.87	35	47	832	4.36	40	59	904	4.66	43	68
702		738	3.63	36	49	781	3.81	38	54	899	4.27	43	67	977	4.54	47	77
802		804	3.63	39	56	850	3.80	41	62	976	4.22	47	78	1061	4.49	51	90
852		899	3.85	43	36	944	4.00	46	39	1068	4.39	51	50	1147	4.61	55	58
1002		1037	3.65	50	41	1099	3.84	53	46	1266	4.31	61	61	1378	4.59	66	72
1052		1086	3.62	52	47	1150	3.80	55	53	1324	4.25	64	69	1441	4.52	69	82
1152		1239	3.88	60	41	1301	4.04	63	44	1469	4.48	71	55	1581	4.75	76	62
1252		1259	3.84	61	32	1335	4.05	64	35	1544	4.58	74	45	1684	4.88	81	52
1352		1347	3.72	65	37	1428	3.92	69	41	1649	4.40	79	52	1796	4.68	86	60
1452		1467	3.65	71	43	1555	3.83	75	48	1793	4.27	86	61	1953	4.53	94	70
1552		1560	3.64	75	49	1653	3.80	80	54	1905	4.22	92	68	2073	4.46	100	79
1652		1766	3.98	85	43	1857	4.14	89	47	2102	4.53	101	60	2262	4.75	109	69
1702		1833	4.01	88	46	1929	4.17	93	51	2186	4.55	105	64	2354	4.77	113	74
252	55	300	3.47	9	15	315	3.63	10	15	354	4.05	11	17	378	4.31	11	20
302		334	3.41	10	16	351	3.56	11	17	395	3.96	12	21	423	4.19	13	24
352		393	3.47	12	20	413	3.63	12	22	466	4.04	14	27	500	4.30	15	31
402		457	3.26	14	15	483	3.44	15	16	555	3.90	17	20	604	4.20	18	23
452		470	3.26	14	15	497	3.44	15	16	570	3.92	17	20	620	4.22	19	23
552		534	3.21	16	18	563	3.38	17	20	645	3.82	19	25	699	4.09	21	29
602		592	3.36	18	22	619	3.51	19	23	694	3.90	21	28	743	4.13	22	32
652		664	3.23	20	18	702	3.41	21	20	805	3.86	24	25	874	4.15	26	29
702		719	3.21	22	21	759	3.37	23	23	871	3.80	26	29	944	4.06	29	33
802		782	3.23	24	24	826	3.38	25	27	944	3.78	29	33	1022	4.01	31	38
852		889	3.46	27	15	933	3.61	28	15	1051	3.97	32	19	1127	4.18	34	22
1002		1013	3.23	31	15	1071	3.40	32	17	1229	3.85	37	23	1334	4.12	40	27
1052		1061	3.21	32	18	1121	3.38	34	20	1285	3.81	39	26	1395	4.07	42	30
1152		1231	3.48	37	18	1290	3.63	39	19	1450	4.03	44	23	1555	4.28	47	26
1252		1225	3.37	37	15	1297	3.56	39	15	1495	4.05	45	19	1626	4.35	49	22
1352		1309	3.26	40	15	1386	3.44	42	17	1594	3.90	48	22	1734	4.18	52	25
1452		1427	3.22	43	18	1509	3.39	46	20	1735	3.81	52	25	1886	4.07	57	29
1552		1517	3.23	46	20	1604	3.39	48	22	1842	3.79	56	28	-	-	-	-
1652		1746	3.57	53	17	1834	3.71	55	19	2067	4.08	62	24	2219	4.30	67	27
1702		1807	3.60	55	18	1899	3.75	57	20	2145	4.11	65	25	2305	4.33	70	29
252	60	298	3.09	7	15	312	3.23	8	15	350	3.59	8	15	374	3.82	9	15
302		332	3.03	8	15	348	3.17	8	15	391	3.52	9	15	417	3.73	10	16
352		392	3.11	9	15	411	3.26	10	15	463	3.62	11	18	495	3.84	12	20
402		446	2.86	11	15	471	3.01	11	15	539	3.42	13	15	584	3.68	14	15
452		459	2.85	11	15	484	3.00	12	15	554	3.42	13	15	600	3.69	15	15
552		523	2.82	13	15	551	2.97	13	15	627	3.36	15	16	678	3.60	16	18
602		592	3.00	14	15	618	3.13	15	16	689	3.47	17	19	736	3.68	18	21
652		648	2.82	16	15	683	2.97	17	15	780	3.37	19	16	844	3.62	20	19
702		701	2.80	17	15	740	2.95	18	15	844	3.32	20	19	913	3.56	22	21
802		761	2.83	18	16	802	2.97	19	17	913	3.32	22	21	986	3.53	24	24
852		880	3.08	21	15	922	3.20	22	15	1035	3.53	25	15	1107	3.72	27	15
1002		991	2.84	24	15	1045	2.99	25	15	1194	3.38	29	15	1293	3.63	31	16
1052		1039	2.82	25	15	1095	2.97	27	15	1249	3.35	30	15	1352	3.59	33	18
1152		1227	3.09	30	15	1283	3.23	31	15	1435	3.58	35	15	1534	3.80	37	17
1252		1193	2.94	29	15	1261	3.10	31	15	1446	3.53	35	15	1569	3.81	38	15
1352		1275	2.84	31	15	1346	2.99	33	15	1541	3.40	37	15	1671	3.65	40	16
1452		1390	2.81	34	15	1468	2.96	36	15	1679	3.34	41	16	1821	3.58	44	18
1552		1476	2.83	36	15	1558	2.97	38	15	1780	3.34	43	18	1929	3.56	47	21
1652		1731	3.16	42	15	1815	3.29	44	15	2036	3.62	49	15	2180	3.82	53	17
1702		1784	3.19	43	15	1872	3.32	45	15	2106	3.65	51	16	2258	3.85	55	18

Legend
LWT Leaving water temperature, °C
Qh Heating capacity, kW
COP Coefficient of performance, kW/kW
q Condenser water flow rate, l/s
Δp Condenser pressure drop, kPa

Application data
Standard units, refrigerant: R-134a
Evaporator entering/leaving water temperature difference: 3 K
Condenser entering/leaving water temperature difference: 5 K for LWT values <55°C, 8 K for values = 55°C, 10 K for LWT values >55°C
Evaporator and condenser fluid: water
Fouling factor: 0.18 x 10^{-4} (m^2 K)/W

Performances in accordance with EN14511-3:2011.

Heating capacities

Standard-efficiency 30XWH- units

		Evaporator entering water temperature, °C															
30XWH-	LWT °C	8				10				15				18			
		Qh kW	COP kW/kW	q l/s	Δp kPa	Qh kW	COP kW/kW	q l/s	Δp kPa	Qh kW	COP kW/kW	q l/s	Δp kPa	Qh kW	COP kW/kW	q l/s	Δp kPa
252	30	310	7.20	15	35	327	7.67	16	39	357	8.46	17	45	375	8.93	18	49
302		347	7.14	17	43	364	7.51	17	47	380	7.86	18	50	396	8.24	19	54
352		404	7.00	19	53	427	7.43	21	59	475	8.34	23	71	491	8.64	24	75
402		519	6.87	25	43	552	7.28	27	48	616	8.06	30	57	641	8.37	31	61
452		532	7.06	26	44	562	7.45	27	48	595	7.88	29	53	616	8.14	30	56
552		598	6.90	29	53	611	7.05	29	55	637	7.34	31	60	651	7.49	31	62
602		604	6.90	29	55	638	7.30	31	60	691	7.92	33	69	709	8.14	34	72
652		762	7.18	37	56	811	7.63	39	62	874	8.20	42	70	906	8.47	44	74
702		823	7.10	40	63	871	7.50	42	69	924	7.92	44	77	952	8.14	46	80
802		882	6.91	42	72	901	7.05	43	74	944	7.35	45	80	968	7.52	47	84
852		927	7.11	45	41	944	7.23	45	43	979	7.49	47	46	995	7.60	48	47
1002		1146	7.04	55	55	1221	7.48	59	62	1336	8.16	64	75	1401	8.54	67	82
1052		1197	7.00	58	62	1274	7.45	61	70	1400	8.15	67	85	1456	8.46	70	92
1152		1278	7.30	61	47	1324	7.56	64	50	1402	8.02	67	55	1443	8.27	69	58
1252		1411	7.57	68	42	1504	8.07	72	47	1693	9.05	81	57	1788	9.53	86	63
1352		1511	7.40	73	49	1611	7.88	77	54	1845	9.00	89	68	1947	9.48	94	75
1452		1639	7.27	79	57	1746	7.74	84	63	1943	8.57	93	76	2042	8.99	98	83
1552		1748	7.21	84	64	1835	7.56	88	70	1978	8.12	95	80	2053	8.41	99	85
1652		1831	7.51	88	50	1886	7.73	91	53	2002	8.19	96	59	2074	8.46	100	64
1702		1908	7.52	92	54	1960	7.72	94	57	2081	8.16	100	64	2154	8.42	103	68
252	35	308	6.15	15	34	325	6.51	16	37	368	7.46	18	46	383	7.78	18	50
302		344	6.08	17	41	363	6.43	17	45	400	7.10	19	54	412	7.33	20	57
352		401	6.02	19	52	423	6.37	20	57	483	7.30	23	71	510	7.71	25	79
402		505	5.91	24	40	537	6.27	26	45	624	7.22	30	57	649	7.48	31	61
452		518	6.03	25	41	551	6.41	27	45	612	7.10	29	54	632	7.33	30	57
552		584	5.92	28	50	621	6.28	30	56	663	6.68	32	62	681	6.84	33	65
602		600	5.94	29	53	632	6.28	30	58	722	7.20	35	72	741	7.40	36	76
652		740	6.10	36	52	787	6.48	38	57	899	7.35	43	72	931	7.60	45	76
702		800	6.04	38	59	850	6.40	41	65	958	7.15	46	80	991	7.38	48	84
802		874	6.00	42	69	928	6.34	45	76	986	6.71	47	85	1008	6.85	49	88
852		926	6.17	45	40	976	6.49	47	45	1032	6.84	50	50	1057	6.99	51	52
1002		1117	6.02	54	51	1188	6.39	57	58	1366	7.31	66	76	1422	7.60	68	83
1052		1166	5.99	56	58	1240	6.36	60	65	1428	7.29	69	86	1486	7.57	71	93
1152		1264	6.26	61	45	1335	6.62	64	49	1452	7.23	70	57	1501	7.48	72	61
1252		1370	6.43	66	39	1459	6.85	70	43	1696	7.94	82	56	1794	8.37	86	62
1352		1467	6.28	71	45	1562	6.69	75	50	1821	7.77	88	66	1957	8.32	94	74
1452		1593	6.18	77	53	1695	6.56	82	59	1967	7.57	95	76	2068	7.94	99	83
1552		1697	6.14	82	60	1806	6.52	87	67	2012	7.22	97	80	2097	7.51	101	86
1652		1820	6.48	88	49	1923	6.83	93	54	2090	7.39	101	63	2157	7.60	104	67
1702		1900	6.52	91	53	2008	6.87	97	58	2171	7.37	104	68	2234	7.57	107	71
252	40	306	5.28	15	33	322	5.57	16	36	365	6.36	18	45	393	6.85	19	51
302		342	5.21	16	40	360	5.49	17	44	408	6.22	20	55	436	6.68	21	62
352		399	5.20	19	50	420	5.49	20	55	478	6.25	23	69	515	6.73	25	78
402		492	5.10	24	38	523	5.40	25	42	607	6.23	29	54	661	6.74	32	62
452		505	5.17	24	38	536	5.49	26	42	622	6.34	30	55	654	6.66	32	59
552		570	5.07	27	47	605	5.37	29	52	696	6.13	34	66	714	6.29	34	69
602		596	5.13	29	51	628	5.41	30	56	713	6.17	34	69	770	6.68	37	79
652		719	5.19	35	49	764	5.51	37	54	885	6.35	43	69	962	6.86	46	79
702		778	5.14	37	55	826	5.44	40	61	955	6.23	46	78	1030	6.70	50	88
802		849	5.13	41	65	900	5.41	43	71	1030	6.13	50	89	1056	6.28	51	93
852		916	5.32	44	38	965	5.59	46	43	1099	6.30	53	55	1126	6.44	54	58
1002		1088	5.15	52	48	1156	5.47	56	54	1340	6.31	65	72	1454	6.83	70	84
1052		1137	5.12	55	54	1207	5.43	58	61	1400	6.28	67	81	1524	6.81	73	96
1152		1253	5.39	60	43	1321	5.69	64	47	1505	6.51	73	60	1570	6.80	76	64
1252		1330	5.47	64	36	1415	5.82	68	40	1648	6.77	79	52	1797	7.36	87	61
1352		1424	5.33	69	42	1514	5.67	73	47	1760	6.58	85	61	1924	7.17	93	71
1452		1548	5.26	75	49	1645	5.58	79	55	1910	6.44	92	71	2087	7.01	101	83
1552		1648	5.23	79	56	1751	5.55	84	62	2032	6.39	98	80	2157	6.77	104	89
1652		1800	5.57	87	47	1898	5.86	91	52	2160	6.60	104	66	2266	6.90	109	72
1702		1876	5.61	90	50	1980	5.90	95	56	2254	6.64	109	71	2344	6.88	113	77
252	45	303	4.57	15	32	319	4.80	15	35	361	5.43	17	43	387	5.82	19	49
302		339	4.50	16	39	356	4.72	17	42	403	5.30	19	52	433	5.70	21	59
352		396	4.52	19	48	417	4.76	20	53	474	5.38	23	66	509	5.78	25	75
402		480	4.39	23	35	509	4.65	25	39	589	5.35	28	50	642	5.80	31	58
452		492	4.43	24	36	522	4.70	25	40	603	5.42	29	51	658	5.89	32	59
552		557	4.34	27	45	590	4.60	28	49	680	5.27	33	62	740	5.73	36	72
602		594	4.45	29	50	623	4.68	30	54	706	5.30	34	67	759	5.73	37	76
652		699	4.43	34	45	741	4.69	36	50	856	5.39	41	64	932	5.84	45	73
702		756	4.38	37	52	802	4.63	39	57	925	5.29	45	72	1007	5.73	49	83
802		825	4.39	40	60	873	4.62	42	66	1006	5.26	49	84	1095	5.70	53	97
852		906	4.61	44	37	953	4.83	46	41	1081	5.42	52	52	1164	5.78	56	61
1002		1060	4.41	51	44	1125	4.68	54	50	1300	5.39	63	66	1418	5.86	68	79
1052		1109	4.39	54	50	1176	4.65	57	56	1358	5.36	66	75	1480	5.82	71	89
1152		1243	4.66	60	42	1308	4.91	63	46	1484	5.58	72	57	1600	6.03	77	65
1252		1292	4.66	62	34	1373	4.96	66	37	1593	5.75	77	48	1739	6.26	84	56
1352		1383	4.54	67	39	1468	4.83	71	43	1701	5.58	82	56	1856	6.07	90	65
1452		1504	4.47	73	46	1596	4.74	77	51	1847	5.46	89	66	2014	5.93	97	76
1552		1601	4.47	77	52	1698	4.73	82	58	1964	5.43	95	74	2141	5.90	103	86
1652		1780	4.80	86	45	1875	5.04	90	49	2129	5.66	103	63	2295	6.06	111	73
1702		1852	4.85	89	48	1952	5.09	94	53	2218	5.70	107	68	2393	6.11	115	78

Legend

LWT Leaving water temperature, °C
Qh Heating capacity, kW
COP Coefficient of performance, kW/kW
q Condenser water flow rate, l/s
Δp Condenser pressure drop, kPa

Application data

Standard units, refrigerant: R-134a
Evaporator entering/leaving water temperature difference: 3 K
Condenser entering/leaving water temperature difference: 5 K for LWT values <55°C, 8 K for values = 55°C, 10 K for LWT values >55°C
Evaporator and condenser fluid: water
Fouling factor: 0.18 x 10^{-4} (m^2 K)/W
Gross performances, not in accordance with EN14511-3:2011. These performances do not take into account the correction for the proportional heating capacity and power input generated by the water pump to overcome the internal pressure drop in the heat exchanger.

Heating capacities

Standard-efficiency 30XWH- units (continued)

		Evaporator entering water temperature, °C															
30XWH-	LWT °C	8				10				15				18			
		Qh kW	COP kW/kW	q l/s	Δp kPa	Qh kW	COP kW/kW	q l/s	Δp kPa	Qh kW	COP kW/kW	q l/s	Δp kPa	Qh kW	COP kW/kW	q l/s	Δp kPa
252	50	301	3.98	15	31	316	4.17	15	33	357	4.68	17	41	382	4.99	18	47
302		336	3.90	16	37	353	4.09	17	41	398	4.56	19	50	427	4.87	21	57
352		394	3.96	19	47	415	4.15	20	52	469	4.67	23	64	504	4.99	24	73
402		467	3.79	23	33	495	4.01	24	37	570	4.60	28	47	621	4.98	30	54
452		480	3.81	23	34	508	4.03	25	37	585	4.64	28	47	637	5.03	31	55
552		544	3.74	26	42	575	3.95	28	46	660	4.51	32	58	717	4.89	35	67
602		592	3.88	29	49	620	4.07	30	53	699	4.58	34	65	750	4.93	36	73
652		680	3.78	33	43	719	4.00	35	47	828	4.58	40	59	900	4.96	43	68
702		735	3.74	36	49	778	3.95	38	54	895	4.50	43	67	972	4.86	47	77
802		801	3.76	39	56	847	3.96	41	62	971	4.49	47	78	1055	4.85	51	90
852		896	4.00	43	36	942	4.19	46	39	1064	4.67	51	50	1143	4.97	55	58
1002		1034	3.79	50	41	1095	4.01	53	46	1261	4.61	61	61	1372	5.00	66	72
1052		1083	3.77	52	47	1146	3.99	55	53	1318	4.58	64	69	1433	4.97	69	82
1152		1235	4.05	60	41	1297	4.25	63	44	1464	4.81	71	55	1575	5.18	76	62
1252		1256	3.98	61	32	1332	4.23	64	35	1540	4.89	74	45	1678	5.31	81	52
1352		1343	3.87	65	37	1424	4.11	69	41	1643	4.73	79	52	1789	5.14	86	60
1452		1462	3.82	71	43	1550	4.04	75	48	1786	4.63	86	61	1944	5.02	94	70
1552		1555	3.83	75	49	1647	4.04	80	54	1897	4.63	92	68	2062	5.01	100	79
1652		1760	4.15	85	43	1851	4.35	89	47	2094	4.87	101	60	2252	5.19	109	69
1702		1827	4.20	88	46	1923	4.40	93	51	2177	4.91	105	64	2343	5.24	113	74
252	55	299	3.52	9	15	314	3.70	10	15	353	4.15	11	17	378	4.43	11	20
302		334	3.47	10	16	351	3.63	11	17	394	4.06	12	21	422	4.32	13	24
352		393	3.54	12	20	413	3.72	12	22	466	4.17	14	27	499	4.46	15	31
402		456	3.31	14	15	483	3.51	15	16	555	4.02	17	20	603	4.36	18	23
452		469	3.31	14	15	496	3.51	15	16	570	4.04	17	20	619	4.38	19	23
552		533	3.28	16	18	563	3.46	17	20	644	3.95	19	25	697	4.27	21	29
602		591	3.45	18	22	618	3.61	19	23	693	4.06	21	28	742	4.34	22	32
652		663	3.29	20	18	701	3.48	21	20	804	3.98	24	25	872	4.31	26	29
702		717	3.27	22	21	758	3.45	23	23	869	3.93	26	29	942	4.24	29	33
802		781	3.30	24	24	824	3.47	25	27	942	3.92	29	33	1020	4.21	31	38
852		888	3.56	27	15	932	3.72	28	15	1049	4.15	32	19	1125	4.41	34	22
1002		1012	3.31	31	15	1070	3.50	32	17	1228	4.02	37	23	1333	4.36	40	27
1052		1060	3.30	32	18	1120	3.49	34	20	1284	4.00	39	26	1393	4.34	42	30
1152		1230	3.59	37	18	1289	3.76	39	19	1448	4.23	44	23	1553	4.55	47	26
1252		1224	3.45	37	15	1296	3.66	39	15	1493	4.23	45	19	1624	4.61	49	22
1352		1308	3.35	40	15	1384	3.55	42	17	1593	4.09	48	22	1731	4.45	52	25
1452		1425	3.31	43	18	1508	3.51	46	20	1733	4.03	52	25	1883	4.37	57	29
1552		1515	3.34	46	20	1602	3.53	48	22	1839	4.04	56	28	-	-	-	-
1652		1745	3.67	53	17	1832	3.84	55	19	2065	4.29	62	24	2216	4.57	67	27
1702		1805	3.71	55	18	1897	3.89	57	20	2142	4.33	65	25	2302	4.63	70	29
252	60	298	3.12	7	15	312	3.27	8	15	350	3.66	8	15	373	3.90	9	15
302		332	3.07	8	15	348	3.21	8	15	390	3.59	9	15	417	3.82	10	16
352		392	3.16	9	15	411	3.31	10	15	462	3.71	11	18	495	3.95	12	20
402		446	2.89	11	15	470	3.05	11	15	538	3.49	13	15	584	3.79	14	15
452		459	2.88	11	15	484	3.05	12	15	553	3.49	13	15	600	3.79	15	15
552		522	2.86	13	15	550	3.02	13	15	627	3.44	15	16	678	3.71	16	18
602		591	3.06	14	15	617	3.20	15	16	689	3.58	17	19	735	3.82	18	21
652		647	2.86	16	15	682	3.01	17	15	779	3.44	19	16	843	3.72	20	19
702		700	2.84	17	15	739	2.99	18	15	842	3.40	20	19	912	3.66	22	21
802		760	2.88	18	16	801	3.02	19	17	912	3.41	22	21	985	3.65	24	24
852		879	3.14	21	15	921	3.28	22	15	1034	3.65	25	15	1106	3.87	27	15
1002		990	2.89	24	15	1044	3.05	25	15	1193	3.49	29	15	1292	3.78	31	16
1052		1038	2.88	25	15	1095	3.04	27	15	1248	3.47	30	15	1351	3.76	33	18
1152		1226	3.17	30	15	1283	3.32	31	15	1434	3.71	35	15	1533	3.98	37	17
1252		1192	2.98	29	15	1260	3.16	31	15	1445	3.65	35	15	1568	3.96	38	15
1352		1273	2.89	31	15	1344	3.05	33	15	1540	3.51	37	15	1670	3.81	40	16
1452		1389	2.87	34	15	1466	3.03	36	15	1678	3.47	41	16	1819	3.76	44	18
1552		1475	2.90	36	15	1556	3.05	38	15	1779	3.49	43	18	1927	3.77	47	21
1652		1730	3.23	42	15	1813	3.38	44	15	2035	3.76	49	15	2179	3.99	53	17
1702		1782	3.26	43	15	1870	3.41	45	15	2104	3.79	51	16	2256	4.04	55	18

Legend
LWT Leaving water temperature, °C
Qh Heating capacity, kW
COP Coefficient of performance, kW/kW
q Condenser water flow rate, l/s
Δp Condenser pressure drop, kPa

Application data
Standard units, refrigerant: R-134a
Evaporator entering/leaving water temperature difference: 3 K
Condenser entering/leaving water temperature difference: 5 K for LWT values <55°C, 8 K for values = 55°C, 10 K for LWT values >55°C
Evaporator and condenser fluid: water
Fouling factor: 0.18 x 10^{-4} (m^2 K)/W

Gross performances, not in accordance with EN14511-3:2011. These performances do not take into account the correction for the proportional heating capacity and power input generated by the water pump to overcome the internal pressure drop in the heat exchanger.

Cooling capacities in accordance with EN14511-3 : 2011

Standard-efficiency 30XW-- units with option 150

		Condenser entering water temperature, °C																							
30XW-- Opt. 150	LWT °C	25				30				35				40				45				50			
		Qc kW	EER kW/kW	q l/s	Δp kPa	Qc kW	EER kW/kW	q l/s	Δp kPa	Qc kW	EER kW/kW	q l/s	Δp kPa	Qc kW	EER kW/kW	q l/s	Δp kPa	Qc kW	EER kW/kW	q l/s	Δp kPa	Qc kW	EER kW/kW	q l/s	Δp kPa
252	5	276	5.34	13	20	267	4.75	13	19	258	4.21	12	18	249	3.71	12	17	239	3.26	11	16	229	2.85	11	15
302		303	5.26	14	23	293	4.66	14	22	283	4.11	14	21	273	3.61	13	19	262	3.16	12	18	250	2.76	12	17
352		339	5.19	16	28	328	4.59	16	27	317	4.04	15	25	305	3.55	15	24	292	3.12	14	22	279	2.72	13	20
402		409	4.74	20	30	389	4.21	19	27	368	3.71	18	24	347	3.24	17	22	325	2.82	16	19	303	2.42	14	17
452		439	5.04	21	33	417	4.48	20	30	395	3.96	19	27	372	3.46	18	24	348	3.01	17	21	324	2.59	15	19
552		489	4.96	23	41	465	4.41	22	37	440	3.89	21	33	414	3.41	20	30	388	2.96	19	26	360	2.54	17	23
602		501	5.10	24	43	484	4.55	23	40	467	4.03	22	37	450	3.55	21	35	431	3.12	21	32	412	2.71	20	29
652		624	4.97	30	39	593	4.46	28	36	561	3.94	27	32	528	3.45	25	29	493	2.99	24	25	458	2.56	22	22
702		688	5.01	33	47	654	4.48	31	43	618	3.96	30	39	581	3.46	28	35	544	2.99	26	31	505	2.56	24	27
802		719	4.90	34	52	685	4.42	33	48	647	3.92	31	43	610	3.44	29	38	571	2.97	27	34	-	-	-	-
852		790	5.16	38	57	768	4.64	37	54	744	4.12	36	51	718	3.63	34	48	689	3.16	33	45	657	2.74	31	41
1002		964	5.15	46	67	916	4.60	44	61	866	4.07	41	55	815	3.57	39	49	763	3.10	36	44	709	2.67	34	38
1052		1017	5.08	49	73	966	4.54	46	67	914	4.01	44	61	860	3.52	41	54	804	3.06	38	48	747	2.63	36	42
1152		1098	5.36	53	63	1060	4.78	51	59	1020	4.24	49	55	980	3.73	47	51	938	3.27	45	48	893	2.84	43	44
1252		1233	5.51	59	66	1153	4.90	55	58	1081	4.31	52	51	1035	3.82	49	47	971	3.33	46	42	902	2.86	43	36
1352		1292	5.15	62	71	1227	4.62	59	64	1160	4.10	55	57	1092	3.60	52	51	1023	3.12	49	45	951	2.69	45	39
1452		1394	5.11	67	83	1324	4.59	63	75	1251	4.06	60	67	1176	3.56	56	60	1100	3.08	53	52	1023	2.65	49	46
1552		1490	5.07	71	99	1419	4.61	68	90	1330	4.09	64	79	1263	3.61	60	72	1181	3.13	56	63	1097	2.68	52	55
1652		1604	5.40	77	56	1558	4.85	74	53	1507	4.32	72	50	1451	3.81	69	46	1391	3.33	66	42	1328	2.89	63	38
1702		1659	5.38	79	62	1613	4.84	77	58	1562	4.32	75	55	1505	3.81	72	51	1443	3.33	69	46	1376	2.89	66	42
252	7	294	5.53	14	22	285	4.93	14	21	275	4.37	13	20	265	3.85	13	18	255	3.38	12	17	244	2.96	12	16
302		322	5.43	15	26	312	4.82	15	24	301	4.26	14	23	290	3.75	14	21	278	3.28	13	20	266	2.87	13	18
352		361	5.37	17	31	349	4.76	17	30	337	4.19	16	28	324	3.68	16	26	311	3.23	15	24	297	2.81	14	22
402		440	4.94	21	34	418	4.40	20	31	396	3.89	19	28	373	3.41	18	25	350	2.97	17	22	326	2.56	16	19
452		471	5.25	23	38	448	4.68	21	34	424	4.14	20	31	400	3.64	19	27	375	3.17	18	24	350	2.73	17	21
552		524	5.14	25	46	499	4.59	24	42	472	4.07	23	38	445	3.57	21	34	417	3.11	20	30	388	2.68	19	26
602		534	5.29	26	48	516	4.72	25	45	498	4.19	24	42	479	3.70	23	39	459	3.24	22	36	438	2.82	21	33
652		669	5.14	32	44	636	4.62	30	40	602	4.10	29	36	567	3.60	27	32	530	3.13	25	29	493	2.69	24	25
702		736	5.17	35	53	700	4.64	34	48	663	4.12	32	44	624	3.61	30	39	584	3.13	28	35	543	2.69	26	30
802		769	5.06	37	58	731	4.57	35	53	680	4.03	33	46	654	3.58	31	43	612	3.10	29	38	569	2.66	27	34
852		838	5.32	40	62	815	4.78	39	59	790	4.26	38	56	762	3.76	36	53	732	3.28	35	49	699	2.85	33	45
1002		1036	5.34	50	75	984	4.78	47	68	931	4.25	45	62	877	3.73	42	56	821	3.26	39	49	764	2.81	37	43
1052		1093	5.27	52	83	1039	4.72	50	75	983	4.19	47	68	925	3.68	44	61	866	3.21	41	54	805	2.77	39	48
1152		1172	5.56	56	70	1131	4.96	54	66	1088	4.40	52	61	1044	3.88	50	57	998	3.40	48	53	951	2.96	45	48
1252		1324	5.70	63	75	1228	5.07	59	65	1136	4.45	54	56	1089	3.95	52	51	1045	3.49	50	47	972	3.01	46	41
1352		1386	5.32	66	80	1317	4.80	63	73	1246	4.27	60	65	1173	3.76	56	58	1099	3.27	53	51	1023	2.82	49	45
1452		1495	5.27	72	94	1420	4.75	68	85	1343	4.22	64	76	1264	3.71	61	68	1182	3.23	57	60	1101	2.78	53	52
1552		1595	5.23	77	112	1519	4.76	73	102	1404	4.21	67	87	1344	3.74	64	80	1268	3.27	61	72	1179	2.82	56	62
1652		1705	5.56	82	63	1655	5.01	79	59	1601	4.46	77	56	1543	3.94	74	52	1480	3.45	71	47	1412	3.00	68	43
1702		1761	5.53	84	69	1712	4.99	82	65	1658	4.45	79	61	1599	3.94	77	57	1533	3.45	73	52	1463	3.00	70	47
252	10	323	5.80	15	25	312	5.17	15	24	302	4.59	14	23	291	4.06	14	21	279	3.57	13	20	267	3.13	13	18
302		354	5.69	17	30	342	5.05	16	28	330	4.47	16	26	318	3.93	15	25	304	3.45	15	23	291	3.01	14	21
352		396	5.63	19	36	383	5.00	18	34	370	4.42	18	32	356	3.89	17	30	341	3.41	16	28	325	2.97	16	26
402		489	5.23	23	41	465	4.68	22	37	441	4.16	21	33	416	3.66	20	30	390	3.20	19	27	364	2.77	17	23
452		523	5.54	25	45	498	4.97	24	41	472	4.42	23	37	445	3.89	21	33	418	3.40	20	29	390	2.95	19	26
552		582	5.41	28	55	553	4.85	27	50	525	4.32	25	45	495	3.80	24	40	464	3.32	22	36	432	2.88	21	31
602		588	5.56	28	56	567	4.98	27	53	547	4.43	26	49	525	3.91	25	45	503	3.43	24	42	480	2.99	23	38
652		739	5.38	35	52	704	4.86	34	47	667	4.33	32	43	628	3.82	30	39	589	3.34	28	34	548	2.88	26	30
702		813	5.39	39	62	773	4.86	37	57	733	4.33	35	51	691	3.82	33	46	647	3.33	31	41	603	2.87	29	36
802		848	5.28	41	68	801	4.77	38	61	728	4.18	35	52	707	3.74	34	49	677	3.29	32	45	630	2.83	30	40
852		914	5.54	44	71	889	4.99	43	68	861	4.46	41	64	831	3.94	40	60	798	3.45	38	56	763	3.01	37	52
1002		1150	5.61	55	89	1093	5.05	53	81	1035	4.50	50	74	976	3.98	47	66	915	3.48	44	59	852	3.02	41	52
1052		1214	5.53	58	98	1154	4.98	55	90	1093	4.44	52	81	1030	3.92	49	73	965	3.43	46	65	898	2.98	43	57
1152		1291	5.84	62	82	1244	5.23	60	77	1196	4.65	57	72	1146	4.10	55	66	1095	3.60	53	61	1042	3.13	50	56
1252		1467	5.97	70	90	1358	5.33	65	77	1237	4.67	59	65	1173	4.13	56	58	1137	3.68	55	55	1084	3.24	52	50
1352		1533	5.56	74	96	1458	5.03	70	87	1380	4.50	66	78	1300	3.98	62	70	1219	3.49	58	62	1137	3.03	55	54
1452		1652	5.50	79	112	1572	4.98	76	102	1488	4.45	71	91	1401	3.93	67	81	1313	3.44	63	72	1222	2.98	59	62
1552		1760	5.44	85	133	1676	4.97	81	121	1520	4.39	73	100	1445	3.90	69	91	1406	3.48	68	86	1308	3.00	63	75
1652		1859	5.78	89	74	1805	5.21	87	70	1746	4.66	84	65	1683	4.13	81	61	1615	3.63	77	56	1542	3.16	74	51
1702		1920	5.74	92	81	1866	5.19	90	76	1806	4.64	87	71	1742	4.11	84	66	1672	3.61	80	61	1597	3.15	77	56

Legend
LWT Leaving water temperature, °C
Qc Cooling capacity, kW
EER Energy efficiency ratio, kW/kW
q Evaporator water flow rate, l/s
Δp Evaporator pressure drop, kPa

Application data
Standard units, refrigerant: R-134a
Evaporator and condenser entering/leaving water temperature difference: 5 K
Evaporator and condenser fluid: water
Fouling factor: 0.18 x 10^{-4} (m^2 K)/W

Performances in accordance with EN14511-3:2011.

Cooling capacities in accordance with EN14511-3 : 2011

Standard-efficiency 30XW-- units with option 150 (continued)

		Condenser entering water temperature, °C																							
30XW-- Opt. 150	LWT °C	25				30				35				40				45				50			
		Qc kW	EER kW/kW	q l/s	Δp kPa	Qc kW	EER kW/kW	q l/s	Δp kPa	Qc kW	EER kW/kW	q l/s	Δp kPa	Qc kW	EER kW/kW	q l/s	Δp kPa	Qc kW	EER kW/kW	q l/s	Δp kPa	Qc kW	EER kW/kW	q l/s	Δp kPa
252	15	366	6.16	18	31	353	5.49	17	29	339	4.88	16	27	326	4.32	16	25	312	3.80	15	23	298	3.33	14	22
302		412	6.13	20	38	397	5.45	19	36	-	-	-	-	-	-	-	-	349	3.72	17	28	332	3.24	16	26
352		461	6.02	22	46	445	5.37	21	43	429	4.76	21	41	412	4.21	20	38	395	3.70	19	35	376	3.22	18	32
402		578	5.68	28	55	551	5.12	26	50	523	4.58	25	45	494	4.07	24	41	-	-	-	-	430	3.10	21	31
452		619	6.00	30	60	588	5.41	28	55	-	-	-	-	524	4.28	25	44	490	3.76	24	39	456	3.27	22	34
552		688	5.84	33	74	655	5.27	32	67	620	4.71	30	61	581	4.17	28	54	-	-	-	-	508	3.18	24	42
602		686	6.01	33	74	661	5.40	32	69	636	4.81	31	64	611	4.27	29	59	584	3.75	28	54	556	3.27	27	49
652		865	5.73	42	67	824	5.20	40	62	781	4.67	38	56	738	4.15	35	50	693	3.66	33	45	646	3.19	31	40
702		913	5.66	44	75	866	5.12	42	68	818	4.57	39	61	769	4.04	37	55	720	3.54	35	49	669	3.07	32	43
802		895	5.40	43	73	909	5.05	44	76	839	4.48	40	65	788	3.96	38	58	755	3.50	36	54	701	3.02	34	47
852		982	5.72	47	78	1000	5.27	48	81	967	4.71	47	76	931	4.17	45	71	892	3.66	43	66	851	3.20	41	61
1002		1331	5.97	64	113	1263	5.40	61	103	1194	4.84	57	93	1123	4.30	54	83	1051	3.78	51	74	977	3.29	47	65
1052		1411	5.88	68	126	1339	5.32	65	114	1265	4.78	61	103	1190	4.25	57	92	1113	3.74	54	82	1035	3.25	50	72
1152		1476	6.22	71	102	1416	5.59	68	95	1357	4.98	65	88	1297	4.40	62	81	1235	3.86	59	74	1172	3.37	56	67
1252		1725	6.34	83	120	1602	5.72	77	104	1452	5.06	70	86	1346	4.46	65	74	1284	3.96	62	68	1257	3.55	60	65
1352		1797	5.89	87	127	1712	5.38	82	116	1623	4.85	78	104	1531	4.33	74	93	1437	3.82	69	82	1340	3.34	64	72
1452		1800	5.69	87	129	1711	5.17	82	117	1620	4.64	78	105	1527	4.12	74	94	1431	3.62	69	83	1332	3.14	64	72
1552		1861	5.57	90	144	1771	5.09	85	131	1677	4.60	81	118	1581	4.09	76	105	1482	3.59	71	93	1379	3.11	66	81
1652		1932	5.88	93	78	1945	5.39	94	79	1880	4.82	90	74	1810	4.28	87	69	1736	3.77	83	63	1657	3.30	80	57
1702		1998	5.85	96	85	2013	5.37	97	87	1947	4.81	94	81	1876	4.27	90	75	1799	3.75	87	69	1717	3.28	83	63
252	18	368	6.18	18	31	355	5.52	17	29	342	4.91	16	27	329	4.34	16	25	315	3.82	15	23	301	3.35	14	22
302		413	6.14	20	37	398	5.46	19	35	382	4.83	18	33	367	4.25	18	30	350	3.73	17	28	333	3.25	16	26
352		470	6.09	23	47	453	5.41	22	44	435	4.80	21	41	417	4.24	20	38	399	3.72	19	35	379	3.24	18	32
402		586	5.73	28	55	557	5.16	27	50	526	4.61	25	45	496	4.08	24	40	464	3.58	22	35	432	3.11	21	31
452		622	6.02	30	60	590	5.42	28	54	558	4.85	27	49	525	4.29	25	44	492	3.77	24	38	458	3.28	22	34
552		698	5.88	34	75	662	5.31	32	68	626	4.74	30	61	588	4.20	28	54	549	3.68	26	47	510	3.19	25	41
602		718	6.14	35	79	688	5.51	33	73	660	4.91	32	67	631	4.35	30	62	601	3.81	29	56	570	3.32	27	51
652		946	5.91	46	78	902	5.39	43	72	855	4.86	41	65	808	4.34	39	59	759	3.83	37	52	709	3.36	34	46
702		915	5.67	44	74	869	5.13	42	67	821	4.59	40	61	772	4.05	37	54	722	3.55	35	48	672	3.08	32	42
802		903	5.43	44	74	912	5.06	44	75	862	4.54	42	68	811	4.02	39	60	758	3.51	36	53	704	3.03	34	47
852		977	5.71	47	77	1003	5.28	48	80	969	4.72	47	76	933	4.18	45	71	895	3.67	43	66	853	3.20	41	60
1002		1335	5.99	64	112	1267	5.42	61	102	1198	4.86	58	92	1127	4.32	54	82	1055	3.80	51	73	981	3.31	47	64
1052		1415	5.89	68	124	1343	5.34	65	113	1270	4.79	61	102	1195	4.26	58	92	1118	3.75	54	81	1039	3.27	50	71
1152		1480	6.24	71	101	1420	5.60	68	94	1361	4.99	66	87	1301	4.42	63	80	1239	3.88	60	73	1176	3.38	57	67
1252		1892	6.52	91	141	1775	5.94	86	125	1619	5.29	78	104	1470	4.66	71	87	1398	4.14	67	79	1360	3.71	65	74
1352		1962	6.05	95	149	1868	5.55	90	135	1772	5.03	86	122	1674	4.51	81	109	1573	4.00	76	97	1468	3.51	71	85
1452		1805	5.71	87	128	1717	5.19	83	116	1626	4.66	78	104	1532	4.14	74	93	1436	3.63	69	82	1338	3.15	64	71
1552		1866	5.58	90	143	1776	5.11	86	130	1682	4.61	81	117	1586	4.10	77	104	1487	3.60	72	92	1385	3.12	67	80
1652		1920	5.87	92	76	1951	5.40	94	79	1886	4.83	91	73	1816	4.29	87	68	1742	3.78	84	62	1663	3.31	80	57
1702		1987	5.85	96	83	2018	5.38	97	86	1952	4.82	94	80	1881	4.28	91	75	1805	3.76	87	68	1723	3.29	83	62

Legend
LWT Leaving water temperature, °C
Qc Cooling capacity, kW
EER Energy efficiency ratio, kW/kW
q Evaporator water flow rate, l/s
Δp Evaporator pressure drop, kPa

Application data
Standard units, refrigerant: R-134a
Evaporator and condenser entering/leaving water temperature difference: 5 K
Evaporator and condenser fluid: water
Fouling factor: 0.18 x 10^{-4} (m^2 K)/W

Performances in accordance with EN14511-3:2011.

Cooling capacities

Standard-efficiency 30XW-- units with option 150

		Condenser entering water temperature, °C																							
30XW--	LWT	25				30				35				40				45				50			
Opt. 150	°C	Qc kW	EER kW/kW	q l/s	Δp kPa	Qc kW	EER kW/kW	q l/s	Δp kPa	Qc kW	EER kW/kW	q l/s	Δp kPa	Qc kW	EER kW/kW	q l/s	Δp kPa	Qc kW	EER kW/kW	q l/s	Δp kPa	Qc kW	EER kW/kW	q l/s	Δp kPa
252	5	276	5.53	13	20	268	4.90	13	19	259	4.32	12	18	250	3.80	12	17	240	3.33	11	16	229	2.90	11	15
302		303	5.47	14	23	294	4.82	14	22	284	4.24	14	21	273	3.71	13	19	262	3.24	12	18	251	2.81	12	17
352		340	5.42	16	28	329	4.77	16	27	317	4.18	15	25	306	3.66	15	24	293	3.20	14	22	280	2.78	13	20
402		410	4.90	20	30	390	4.33	19	27	369	3.80	18	24	348	3.31	17	22	326	2.87	16	19	303	2.46	14	17
452		440	5.24	21	33	418	4.63	20	30	396	4.07	19	27	373	3.55	18	24	349	3.07	17	21	325	2.63	15	19
552		490	5.18	23	41	466	4.58	22	37	441	4.02	21	33	415	3.50	20	30	388	3.02	19	26	361	2.59	17	23
602		502	5.34	24	43	486	4.74	23	40	469	4.18	22	37	451	3.66	21	35	433	3.20	21	32	413	2.77	20	29
652		626	5.19	30	39	595	4.62	28	36	563	4.06	27	32	529	3.54	25	29	494	3.05	24	25	459	2.61	22	22
702		690	5.26	33	47	656	4.67	31	43	620	4.10	30	39	583	3.56	28	35	545	3.06	26	31	506	2.61	24	27
802		722	5.17	34	52	687	4.62	33	48	649	4.07	31	43	612	3.55	29	38	573	3.05	27	34	-	-	-	-
852		793	5.39	38	57	771	4.82	37	54	747	4.27	36	51	720	3.74	34	48	691	3.25	33	45	659	2.80	31	41
1002		969	5.43	46	67	920	4.80	44	61	869	4.22	41	55	818	3.68	39	49	765	3.18	36	44	711	2.72	34	38
1052		1022	5.38	49	73	971	4.76	46	67	918	4.18	44	61	863	3.64	41	54	807	3.15	38	48	750	2.69	36	42
1152		1103	5.63	53	63	1064	4.99	51	59	1024	4.40	49	55	983	3.85	47	51	941	3.36	45	48	896	2.91	43	44
1252		1238	5.79	59	66	1157	5.10	55	58	1084	4.46	52	51	1039	3.93	49	47	974	3.40	46	42	904	2.91	43	36
1352		1298	5.41	62	71	1232	4.82	59	64	1164	4.24	55	57	1096	3.70	52	51	1026	3.20	49	45	953	2.74	45	39
1452		1401	5.40	67	83	1330	4.81	63	75	1257	4.23	60	67	1181	3.67	56	60	1104	3.17	53	52	1027	2.70	49	46
1552		1499	5.41	71	99	1427	4.87	68	90	1337	4.28	64	79	1270	3.75	60	72	1186	3.23	56	63	1101	2.75	52	55
1652		1610	5.65	77	56	1563	5.05	74	53	1512	4.47	72	50	1456	3.92	69	46	1396	3.41	66	42	1332	2.95	63	38
1702		1665	5.65	79	62	1619	5.06	77	58	1567	4.48	75	55	1510	3.93	72	51	1447	3.42	69	46	1380	2.96	66	42
252	7	295	5.75	14	22	285	5.10	14	21	276	4.50	13	20	266	3.95	13	18	255	3.46	12	17	244	3.02	12	16
302		323	5.67	15	26	313	5.00	15	24	302	4.40	14	23	291	3.85	14	21	279	3.36	13	20	267	2.93	13	18
352		362	5.63	17	31	350	4.96	17	30	338	4.35	16	28	325	3.80	16	26	312	3.32	15	24	297	2.88	14	22
402		441	5.13	21	34	419	4.55	20	31	397	4.00	19	28	374	3.49	18	25	351	3.03	17	22	327	2.60	16	19
452		473	5.48	23	38	449	4.86	21	34	426	4.28	20	31	401	3.73	19	27	376	3.24	18	24	350	2.78	17	21
552		526	5.41	25	46	500	4.79	24	42	474	4.21	23	38	446	3.68	21	34	418	3.18	20	30	389	2.73	19	26
602		536	5.57	26	48	518	4.94	25	45	500	4.36	24	42	481	3.83	23	39	461	3.34	22	36	440	2.89	21	33
652		671	5.40	32	44	638	4.81	30	40	604	4.25	29	36	568	3.71	27	32	532	3.20	25	29	494	2.75	24	25
702		739	5.47	35	53	703	4.86	34	48	665	4.28	32	44	626	3.73	30	39	586	3.22	28	35	544	2.75	26	30
802		772	5.36	37	58	734	4.80	35	53	682	4.20	33	46	656	3.71	31	43	614	3.19	29	38	571	2.72	27	34
852		842	5.59	40	62	819	5.00	39	59	793	4.43	38	56	765	3.88	36	53	734	3.38	35	49	701	2.92	33	45
1002		1041	5.68	50	75	989	5.03	47	68	935	4.43	45	62	881	3.87	42	56	824	3.35	39	49	767	2.88	37	43
1052		1099	5.62	52	83	1044	4.98	50	75	987	4.38	47	68	929	3.83	44	61	870	3.31	41	54	808	2.84	39	48
1152		1178	5.87	56	70	1136	5.20	54	66	1093	4.59	52	61	1048	4.02	50	57	1002	3.50	48	53	954	3.04	45	48
1252		1330	6.03	63	75	1234	5.30	59	65	1141	4.61	54	56	1093	4.07	52	51	1049	3.58	50	47	975	3.08	46	41
1352		1393	5.62	66	80	1323	5.03	63	73	1251	4.44	60	65	1177	3.88	56	58	1103	3.36	53	51	1026	2.89	49	45
1452		1504	5.62	72	94	1428	5.01	68	85	1350	4.42	64	76	1270	3.85	61	68	1187	3.33	57	60	1105	2.85	53	52
1552		1606	5.63	77	112	1529	5.07	73	102	1412	4.43	67	87	1351	3.91	64	80	1274	3.39	61	72	1184	2.90	56	62
1652		1711	5.85	82	63	1661	5.23	79	59	1607	4.64	77	56	1548	4.07	74	52	1484	3.55	71	47	1417	3.08	68	43
1702		1769	5.85	84	69	1720	5.24	82	65	1665	4.64	79	61	1605	4.08	77	57	1539	3.55	73	52	1468	3.07	70	47
252	10	324	6.06	15	25	313	5.38	15	24	302	4.75	14	23	291	4.18	14	21	280	3.67	13	20	267	3.20	13	18
302		355	5.97	17	30	343	5.27	16	28	331	4.64	16	26	318	4.06	15	25	305	3.55	15	23	291	3.09	14	21
352		397	5.96	19	36	385	5.25	18	34	371	4.61	18	32	357	4.04	17	30	342	3.52	16	28	326	3.05	16	26
402		490	5.48	23	41	466	4.87	22	37	442	4.30	21	33	417	3.77	20	30	391	3.27	19	27	365	2.82	17	23
452		525	5.84	25	45	500	5.20	24	41	474	4.59	23	37	447	4.02	21	33	419	3.50	20	29	391	3.01	19	26
552		584	5.75	28	55	556	5.10	27	50	526	4.50	25	45	496	3.94	24	40	465	3.42	22	36	433	2.95	21	31
602		590	5.92	28	56	570	5.25	27	53	549	4.63	26	49	527	4.07	25	45	505	3.55	24	42	481	3.08	23	38
652		742	5.69	35	52	706	5.10	34	47	669	4.51	32	43	630	3.95	30	39	590	3.43	28	34	549	2.95	26	30
702		816	5.76	39	62	777	5.14	37	57	736	4.54	35	51	693	3.97	33	46	649	3.44	31	41	604	2.95	29	36
802		853	5.65	41	68	804	5.05	38	61	731	4.37	35	52	710	3.89	34	49	679	3.41	32	45	632	2.92	30	40
852		918	5.87	44	71	893	5.26	43	68	865	4.66	41	64	835	4.09	40	60	802	3.57	38	56	766	3.09	37	52
1002		1157	6.04	55	89	1099	5.37	53	81	1041	4.74	50	74	980	4.15	47	66	919	3.61	44	59	855	3.11	41	52
1052		1221	5.98	58	98	1161	5.32	55	90	1099	4.69	52	81	1035	4.11	49	73	969	3.57	46	65	902	3.07	43	57
1152		1298	6.23	62	82	1250	5.53	60	77	1201	4.88	57	72	1151	4.28	55	66	1099	3.72	53	61	1046	3.23	50	56
1252		1475	6.39	70	90	1364	5.63	65	77	1242	4.87	59	65	1178	4.28	56	58	1141	3.80	55	55	1088	3.32	52	50
1352		1542	5.94	74	96	1466	5.32	70	87	1387	4.72	66	78	1306	4.14	62	70	1224	3.60	58	62	1141	3.11	55	54
1452		1663	5.93	79	112	1582	5.31	76	102	1497	4.70	71	91	1409	4.11	67	81	1319	3.57	63	72	1227	3.07	59	62
1552		1774	5.93	85	133	1689	5.35	81	121	1530	4.65	73	100	1454	4.10	69	91	1414	3.63	68	86	1314	3.11	63	75
1652		1868	6.14	89	74	1813	5.50	87	70	1753	4.87	84	65	1689	4.29	81	61	1621	3.75	77	56	1548	3.25	74	51
1702		1929	6.13	92	81	1875	5.49	90	76	1814	4.87	87	71	1749	4.29	84	66	1679	3.75	80	61	1603	3.25	77	56

Legend
LWT Leaving water temperature, °C
Qc Cooling capacity, kW
EER Energy efficiency ratio, kW/kW
q Evaporator water flow rate, l/s
Δp Evaporator pressure drop, kPa

Application data
Standard units, refrigerant: R-134a
Evaporator and condenser entering/leaving water temperature difference: 5 K
Evaporator and condenser fluid: water
Fouling factor: 0.18 x 10^{-4} (m^2 K)/W

Gross performances, not in accordance with EN14511-3:2011. These performances do not take into account the correction for the proportional heating capacity and power input generated by the water pump to overcome the internal pressure drop in the heat exchanger.

Cooling capacities

Standard-efficiency 30XW-- units with option 150 (continued)

		Condenser entering water temperature, °C																							
30XW--	LWT	25				30				35				40				45				50			
Opt. 150	°C	Qc kW	EER kW/kW	q l/s	Δp kPa	Qc kW	EER kW/kW	q l/s	Δp kPa	Qc kW	EER kW/kW	q l/s	Δp kPa	Qc kW	EER kW/kW	q l/s	Δp kPa	Qc kW	EER kW/kW	q l/s	Δp kPa	Qc kW	EER kW/kW	q l/s	Δp kPa
252	15	367	6.50	18	31	354	5.75	17	29	340	5.08	16	27	327	4.47	16	25	313	3.92	15	23	299	3.42	14	22
302		413	6.53	20	38	398	5.75	19	36	-	-	-	-	-	-	-	-	350	3.85	17	28	333	3.34	16	26
352		462	6.48	22	46	447	5.71	21	43	431	5.03	21	41	414	4.41	20	38	396	3.85	19	35	377	3.33	18	32
402		581	6.04	28	55	553	5.40	26	50	525	4.79	25	45	496	4.22	24	41	-	-	-	-	432	3.18	21	31
452		621	6.43	30	60	591	5.74	28	55	-	-	-	-	526	4.47	25	44	492	3.89	24	39	457	3.36	22	34
552		691	6.32	33	74	658	5.64	32	67	623	4.99	30	61	583	4.37	28	54	-	-	-	-	510	3.28	24	42
602		690	6.52	33	74	665	5.79	32	69	639	5.12	31	64	613	4.49	29	59	586	3.92	28	54	559	3.40	27	49
652		869	6.16	42	67	827	5.53	40	62	784	4.92	38	56	740	4.34	35	50	695	3.80	33	45	648	3.29	31	40
702		917	6.13	44	75	870	5.48	42	68	822	4.84	39	61	772	4.23	37	55	722	3.68	35	49	671	3.16	32	43
802		900	5.83	43	73	914	5.43	44	76	843	4.75	40	65	791	4.15	38	58	758	3.65	36	54	704	3.12	34	47
852		987	6.11	47	78	1006	5.61	48	81	972	4.97	47	76	936	4.37	45	71	897	3.81	43	66	855	3.31	41	61
1002		1340	6.57	64	113	1271	5.86	61	103	1201	5.18	57	93	1129	4.55	54	83	1056	3.96	51	74	982	3.42	47	65
1052		1422	6.52	68	126	1348	5.81	65	114	1273	5.14	61	103	1197	4.51	57	92	1119	3.93	54	82	1040	3.39	50	72
1152		1485	6.76	71	102	1424	6.00	68	95	1364	5.29	65	88	1303	4.63	62	81	1241	4.03	59	74	1177	3.49	56	67
1252		1737	6.94	83	120	1613	6.16	77	104	1460	5.35	70	86	1353	4.67	65	74	1290	4.11	62	68	1262	3.67	60	65
1352		1810	6.44	87	127	1723	5.80	82	116	1633	5.17	78	104	1540	4.56	74	93	1444	3.99	69	82	1346	3.46	64	72
1452		1813	6.21	87	129	1723	5.57	82	117	1631	4.94	78	105	1536	4.34	74	94	1438	3.77	69	83	1338	3.25	64	72
1552		1877	6.13	90	144	1784	5.53	85	131	1689	4.92	81	118	1592	4.33	76	105	1491	3.76	71	93	1386	3.23	66	81
1652		1941	6.27	93	78	1955	5.73	94	79	1889	5.08	90	74	1818	4.47	87	69	1743	3.91	83	63	1664	3.40	80	57
1702		2008	6.28	96	85	2023	5.73	97	87	1957	5.09	94	81	1885	4.48	90	75	1807	3.91	87	69	1724	3.40	83	63
252	18	369	6.53	18	31	356	5.78	17	29	343	5.11	16	27	329	4.50	16	25	316	3.94	15	23	301	3.44	14	22
302		414	6.54	20	37	399	5.76	19	35	384	5.06	18	33	368	4.43	18	30	351	3.86	17	28	334	3.35	16	26
352		471	6.56	23	47	454	5.77	22	44	437	5.07	21	41	418	4.44	20	38	400	3.87	19	35	380	3.35	18	32
402		589	6.10	28	55	559	5.44	27	50	528	4.82	25	45	497	4.23	24	40	466	3.69	22	35	433	3.19	21	31
452		625	6.46	30	60	592	5.75	28	54	560	5.09	27	49	527	4.48	25	44	493	3.90	24	38	459	3.38	22	34
552		702	6.38	34	75	666	5.68	32	68	628	5.02	30	61	591	4.40	28	54	551	3.83	26	47	512	3.29	25	41
602		722	6.71	35	79	692	5.94	33	73	663	5.24	32	67	634	4.59	30	62	603	3.99	29	56	572	3.45	27	51
652		951	6.44	46	78	906	5.80	43	72	859	5.17	41	65	811	4.57	39	59	762	4.00	37	52	712	3.48	34	46
702		919	6.14	44	74	873	5.49	42	67	824	4.85	40	61	775	4.25	37	54	725	3.69	35	48	674	3.18	32	42
802		908	5.86	44	74	916	5.44	44	75	866	4.83	42	68	814	4.23	39	60	761	3.66	36	53	706	3.13	34	47
852		982	6.09	47	77	1008	5.62	48	80	974	4.98	47	76	938	4.38	45	71	899	3.82	43	66	857	3.31	41	60
1002		1344	6.59	64	112	1275	5.88	61	102	1205	5.20	58	92	1133	4.56	54	82	1060	3.97	51	73	986	3.43	47	64
1052		1426	6.54	68	124	1353	5.83	65	113	1278	5.15	61	102	1202	4.53	58	92	1124	3.94	54	81	1044	3.40	50	71
1152		1490	6.78	71	101	1429	6.01	68	94	1369	5.30	66	87	1308	4.65	63	80	1245	4.05	60	73	1181	3.50	57	67
1252		1907	7.25	91	141	1788	6.49	86	125	1629	5.67	78	104	1478	4.92	71	87	1405	4.34	67	79	1366	3.86	65	74
1352		1978	6.71	95	149	1883	6.06	90	135	1785	5.42	86	122	1685	4.80	81	109	1582	4.21	76	97	1476	3.66	71	85
1452		1819	6.23	87	128	1729	5.59	83	116	1636	4.96	78	104	1541	4.36	74	93	1444	3.79	69	82	1344	3.27	64	71
1552		1882	6.14	90	143	1790	5.55	86	130	1694	4.94	81	117	1596	4.34	77	104	1495	3.77	72	92	1393	3.24	67	80
1652		1929	6.26	92	76	1960	5.74	94	79	1894	5.09	91	73	1824	4.49	87	68	1749	3.93	84	62	1669	3.41	80	57
1702		1997	6.26	96	83	2029	5.75	97	86	1962	5.10	94	80	1890	4.49	91	75	1813	3.92	87	68	1730	3.40	83	62

Legend
LWT Leaving water temperature, °C
Qc Cooling capacity, kW
EER Energy efficiency ratio, kW/kW
q Evaporator water flow rate, l/s
Δp Evaporator pressure drop, kPa

Application data
Standard units, refrigerant: R-134a
Evaporator and condenser entering/leaving water temperature difference: 5 K
Evaporator and condenser fluid: water
Fouling factor: 0.18 x 10^{-4} (m^2 K)/W

Gross performances, not in accordance with EN14511-3:2011. These performances do not take into account the correction for the proportional heating capacity and power input generated by the water pump to overcome the internal pressure drop in the heat exchanger.

Heating capacities in accordance with EN14511-3 : 2011

Standard-efficiency 30XWH- units with option 150

		Evaporator entering water temperature, °C															
30XWH-	LWT	8				10				15				18			
Opt. 150	°C	Qh	COP	q	Δp	Qh	COP	q	Δp	Qh	COP	q	Δp	Qh	COP	q	Δp
		kW	kW/kW	l/s	kPa	kW	kW/kW	l/s	kPa	kW	kW/kW	l/s	kPa	kW	kW/kW	l/s	kPa
252	30	322	6.11	15	37	342	6.28	16	41	395	6.65	19	53	420	6.81	20	59
302		356	6.03	17	44	377	6.17	18	49	435	6.52	21	63	473	6.74	23	73
352		400	5.93	19	54	424	6.08	20	60	489	6.43	23	78	531	6.60	25	90
402		488	5.48	23	40	521	5.65	25	44	611	6.02	29	58	670	6.21	32	68
452		518	5.75	25	44	553	5.91	26	49	649	6.27	31	64	712	6.45	34	75
552		579	5.63	28	53	617	5.78	30	59	724	6.09	35	77	794	6.24	38	90
602		593	5.77	28	55	629	5.91	30	61	727	6.23	35	78	793	6.39	38	90
652		737	5.67	35	54	786	5.80	38	61	915	6.08	44	78	999	6.21	48	91
702		812	5.67	39	64	865	5.79	41	72	1007	6.04	48	92	1060	6.12	51	101
802		852	5.55	41	70	907	5.66	43	78	1054	5.90	50	101	1055	5.92	50	101
852		930	5.78	45	42	982	5.90	47	47	1120	6.14	54	61	1144	6.18	55	63
1002		1132	5.72	54	56	1209	5.86	58	64	1420	6.12	68	87	1535	6.22	73	102
1052		1198	5.64	57	62	1279	5.76	61	71	1503	6.00	72	97	1631	6.09	78	114
1152		1282	5.93	61	47	1361	6.07	65	53	1578	6.37	75	68	1693	6.48	81	77
1252		1433	6.02	69	44	1531	6.14	73	50	1793	6.36	86	65	1965	6.43	94	77
1352		1519	5.69	73	49	1621	5.80	78	54	1892	5.99	90	71	2068	6.06	99	82
1452		1639	5.60	78	56	1748	5.70	84	62	2039	5.86	97	81	2090	5.89	100	85
1552		1752	5.50	84	65	1867	5.58	89	72	2159	5.69	103	93	2168	5.71	104	93
1652		1870	5.95	90	51	1978	6.06	95	57	2213	6.24	106	70	2172	6.24	104	68
1702		1935	5.91	93	55	2046	6.01	98	61	2307	6.18	110	77	2285	6.19	109	76
252	35	318	5.55	15	36	337	5.71	16	39	388	6.06	19	51	411	6.20	20	56
302		351	5.46	17	42	372	5.60	18	47	427	5.93	20	60	463	6.13	22	69
352		395	5.37	19	52	418	5.52	20	58	481	5.85	23	74	522	6.02	25	85
402		473	4.99	23	37	505	5.16	24	41	591	5.54	28	53	648	5.74	31	62
452		502	5.24	24	41	535	5.41	26	46	627	5.78	30	60	-	-	-	-
552		561	5.15	27	49	598	5.29	29	55	700	5.62	33	71	767	5.79	37	83
602		584	5.27	28	53	618	5.41	30	58	713	5.73	34	74	775	5.90	37	85
652		713	5.20	34	50	760	5.34	36	56	885	5.63	42	72	965	5.77	46	84
702		785	5.20	38	60	836	5.33	40	66	972	5.59	47	85	1021	5.68	49	92
802		825	5.13	40	65	875	5.24	42	72	1015	5.50	49	92	1074	5.59	51	101
852		920	5.32	44	40	971	5.43	47	45	1106	5.68	53	58	1174	5.78	56	65
1002		1095	5.25	52	51	1169	5.39	56	58	1371	5.68	66	80	1477	5.80	71	92
1052		1158	5.18	56	57	1236	5.31	59	65	1450	5.58	69	89	1569	5.69	75	104
1152		1259	5.43	60	45	1335	5.56	64	50	1542	5.87	74	64	1647	5.99	79	72
1252		1364	5.51	65	40	1446	5.64	69	44	1692	5.91	81	58	1857	6.02	89	68
1352		1468	5.25	70	45	1566	5.37	75	50	1826	5.60	87	65	1995	5.70	96	76
1452		1584	5.18	76	51	1689	5.29	81	57	1969	5.49	94	75	2015	5.53	96	78
1552		1695	5.14	81	60	1804	5.23	86	66	2081	5.38	100	85	2089	5.40	100	86
1652		1845	5.49	89	49	1951	5.59	94	54	2227	5.81	107	69	2276	5.85	109	72
1702		1912	5.45	92	53	2020	5.56	97	59	2303	5.75	110	75	2356	5.79	113	78
252	40	314	5.04	15	34	332	5.18	16	38	381	5.51	18	48	403	5.64	19	53
302		347	4.94	17	41	367	5.07	18	45	420	5.37	20	57	-	-	-	-
352		389	4.86	19	50	412	4.99	20	55	473	5.31	23	70	512	5.47	25	81
402		459	4.53	22	34	489	4.69	23	38	571	5.07	27	49	626	5.27	30	58
452		486	4.75	23	38	518	4.92	25	42	605	5.29	29	55	-	-	-	-
552		543	4.67	26	46	578	4.82	28	51	675	5.15	32	66	739	5.33	35	77
602		575	4.80	28	50	609	4.93	29	55	699	5.24	34	70	759	5.41	36	80
652		690	4.73	33	47	734	4.87	35	52	854	5.17	41	67	931	5.32	45	77
702		759	4.73	36	55	808	4.86	39	61	938	5.13	45	78	982	5.22	47	85
802		799	4.69	38	60	835	4.78	40	65	937	4.99	45	79	1011	5.12	48	90
852		909	4.85	44	38	959	4.97	46	43	1091	5.21	52	55	1155	5.30	55	62
1002		1058	4.78	51	47	1128	4.93	54	53	1321	5.24	63	73	1419	5.36	68	83
1052		1119	4.72	54	52	1194	4.86	57	59	1399	5.15	67	81	1508	5.27	72	94
1152		1237	4.94	59	43	1310	5.08	63	47	1508	5.38	72	60	1606	5.50	77	67
1252		1306	5.01	63	36	1370	5.12	66	39	1571	5.40	75	50	1716	5.55	82	58
1352		1417	4.80	68	41	1511	4.93	73	46	1760	5.19	84	60	1922	5.31	92	70
1452		1530	4.74	73	47	1630	4.86	78	53	1898	5.09	91	69	1940	5.13	93	71
1552		1621	4.72	78	54	1704	4.81	82	59	1953	5.00	94	75	2012	5.04	96	79
1652		1820	5.01	87	46	1923	5.12	92	51	2191	5.34	105	66	2237	5.38	107	68
1702		1887	5.00	91	50	1992	5.10	96	56	2268	5.30	109	71	2318	5.34	111	74
252	45	310	4.56	15	33	328	4.69	16	36	375	5.00	18	46	395	5.11	19	50
302		342	4.46	16	39	361	4.58	17	43	413	4.86	20	54	444	5.02	21	62
352		384	4.40	18	48	406	4.51	20	52	465	4.81	22	67	503	4.97	24	76
402		444	4.09	21	32	473	4.24	23	35	552	4.61	27	46	-	-	-	-
452		470	4.29	23	35	500	4.45	24	39	584	4.81	28	51	635	5.00	31	58
552		525	4.23	25	42	559	4.37	27	47	651	4.69	31	61	711	4.87	34	70
602		567	4.36	27	48	599	4.48	29	53	686	4.77	33	66	743	4.94	36	76
652		666	4.27	32	43	709	4.41	34	48	823	4.71	40	61	897	4.87	43	71
702		733	4.27	35	51	780	4.40	37	57	904	4.68	43	72	943	4.76	45	78
802		771	4.24	37	56	819	4.36	39	62	924	4.58	44	76	982	4.69	47	84
852		898	4.40	43	37	947	4.51	46	41	1075	4.75	52	52	1135	4.84	55	58
1002		1021	4.34	49	43	1089	4.48	52	49	1272	4.79	61	66	1361	4.92	65	75
1052		1081	4.28	52	48	1152	4.42	55	54	1347	4.72	65	74	1447	4.85	69	85
1152		1216	4.49	59	41	1286	4.61	62	45	1475	4.90	71	57	1566	5.02	75	63
1252		1279	4.57	62	34	1338	4.68	64	37	1503	4.93	72	45	1628	5.08	78	52
1352		1367	4.36	66	38	1456	4.49	70	42	1695	4.76	81	55	1849	4.90	89	64
1452		1477	4.30	71	44	1573	4.42	76	49	1828	4.68	88	63	1866	4.72	90	65
1552		1580	4.32	76	51	1666	4.41	80	56	1865	4.60	90	68	1934	4.65	93	72
1652		1795	4.55	86	44	1894	4.66	91	49	2155	4.88	104	63	2197	4.92	106	65
1702		1861	4.54	90	48	1964	4.64	94	53	2232	4.85	107	68	2278	4.89	109	71

Legend
LWT Leaving water temperature, °C
Qh Heating capacity, kW
COP Coefficient of performance, kW/kW
q Condenser water flow rate, l/s
Δp Condenser pressure drop, kPa

Application data
Standard units, refrigerant: R-134a
Evaporator entering/leaving water temperature difference: 3 K
Condenser entering/leaving water temperature difference: 5 K for LWT values <55°C, 8 K for values = 55°C, 10 K for LWT values >55°C
Evaporator and condenser fluid: water
Fouling factor: 0.18 x 10^{-4} (m^2 K)/W

Performances in accordance with EN14511-3:2011.

Heating capacities in accordance with EN14511-3 : 2011

Standard-efficiency 30XWH- units with option 150 (continued)

		Evaporator entering water temperature, °C															
30XWH-	LWT	8				10				15				18			
Opt. 150	°C	Qh	COP	q	Δp	Qh	COP	q	Δp	Qh	COP	q	Δp	Qh	COP	q	Δp
		kW	kW/kW	l/s	kPa	kW	kW/kW	l/s	kPa	kW	kW/kW	l/s	kPa	kW	kW/kW	l/s	kPa
252	50	306	4.13	15	31	323	4.24	16	34	368	4.52	18	43	387	4.63	19	47
302		338	4.03	16	37	356	4.14	17	41	406	4.39	20	51	435	4.54	21	58
352		379	3.98	18	46	400	4.08	19	50	456	4.35	22	63	493	4.49	24	72
402		430	3.68	21	29	457	3.82	22	33	532	4.17	26	42	581	4.36	28	49
452		454	3.86	22	33	483	4.01	23	36	562	4.36	27	47	609	4.53	29	54
552		507	3.80	24	39	539	3.94	26	43	627	4.25	30	56	684	4.42	33	65
602		560	3.95	27	46	590	4.06	28	51	673	4.32	32	63	728	4.48	35	72
652		643	3.83	31	40	683	3.96	33	44	792	4.27	38	57	863	4.43	41	65
702		708	3.83	34	47	753	3.95	36	52	871	4.24	42	67	906	4.31	44	71
802		746	3.80	36	52	791	3.92	38	57	912	4.18	44	73	953	4.26	46	78
852		887	3.97	43	35	935	4.08	45	39	1059	4.31	51	50	1115	4.40	54	55
1002		985	3.91	47	39	1049	4.05	51	44	1223	4.36	59	60	1305	4.48	63	68
1052		1042	3.87	50	44	1110	4.00	53	49	1295	4.30	62	67	1386	4.42	67	77
1152		1196	4.06	58	39	1263	4.18	61	43	1443	4.45	69	54	1527	4.56	73	59
1252		1237	4.12	60	32	1316	4.26	63	35	1485	4.52	72	44	1583	4.65	76	49
1352		1317	3.92	63	35	1403	4.05	68	39	1630	4.34	78	51	1777	4.48	86	59
1452		1424	3.88	69	40	1515	4.00	73	45	1759	4.26	85	58	1792	4.31	86	60
1552		1523	3.90	73	47	1619	4.01	78	52	1851	4.24	89	65	1859	4.25	90	66
1652		1769	4.12	85	42	1866	4.22	90	47	2118	4.44	102	59	2157	4.48	104	62
1702		1835	4.11	88	46	1935	4.21	93	51	2195	4.41	106	65	2237	4.45	108	67
252	55	302	3.77	9	15	318	3.89	10	15	362	4.18	11	18	380	4.29	11	20
302		333	3.70	10	16	351	3.81	11	17	399	4.08	12	22	426	4.21	13	24
352		374	3.65	11	19	394	3.76	12	21	448	4.03	14	27	483	4.18	15	30
402		417	3.33	13	15	443	3.47	13	15	514	3.81	16	18	558	4.00	17	20
452		439	3.50	13	15	466	3.64	14	15	542	3.99	16	20	585	4.17	18	22
552		490	3.46	15	17	521	3.59	16	18	604	3.91	18	24	656	4.07	20	27
602		552	3.63	17	20	581	3.73	18	22	660	4.00	20	27	712	4.15	21	31
652		621	3.48	19	17	660	3.61	20	19	764	3.92	23	24	831	4.09	25	28
702		685	3.48	21	20	727	3.61	22	22	840	3.90	25	28	871	3.98	26	30
802		722	3.46	22	22	765	3.58	23	24	881	3.85	27	31	917	3.93	28	33
852		876	3.65	26	15	922	3.76	28	15	1043	3.99	32	19	1095	4.08	33	21
1002		951	3.56	29	15	1011	3.69	31	16	1177	4.02	36	22	1251	4.15	38	25
1052		1006	3.52	30	16	1070	3.65	32	18	1245	3.96	38	24	1328	4.09	40	28
1152		1177	3.72	36	16	1241	3.83	37	18	1413	4.09	43	23	1490	4.20	45	25
1252		1191	3.74	36	15	1269	3.88	38	15	1467	4.20	44	19	1578	4.35	48	21
1352		1269	3.55	38	15	1351	3.69	41	16	1568	3.99	47	21	1709	4.15	52	24
1452		1374	3.52	42	17	1462	3.65	44	19	1694	3.94	51	24	1724	3.98	52	25
1552		1471	3.55	44	19	1563	3.67	47	21	1782	3.92	54	27	1790	3.93	54	27
1652		1743	3.78	53	17	1837	3.89	56	18	2081	4.12	63	23	2117	4.16	64	24
1702		1808	3.77	55	18	1905	3.87	58	20	2157	4.10	65	25	2196	4.13	66	26
252	60	298	3.42	7	15	314	3.53	8	15	356	3.81	9	15	373	3.91	9	15
302		329	3.36	8	15	346	3.47	8	15	392	3.72	9	15	418	3.84	10	16
352		369	3.30	9	15	388	3.41	9	15	441	3.66	11	17	474	3.80	11	20
402		404	2.99	10	15	428	3.11	10	15	495	3.43	12	15	536	3.60	13	15
452		424	3.14	10	15	450	3.27	11	15	522	3.59	13	15	561	3.75	14	15
552		474	3.10	11	15	503	3.22	12	15	582	3.52	14	15	629	3.68	15	17
602		545	3.29	13	15	573	3.39	14	15	649	3.63	16	18	698	3.77	17	20
652		600	3.11	15	15	637	3.24	15	15	736	3.54	18	15	800	3.71	19	18
702		662	3.12	16	15	702	3.24	17	15	810	3.53	20	18	837	3.60	20	19
802		699	3.10	17	15	740	3.21	18	16	850	3.48	21	20	882	3.55	21	21
852		866	3.31	21	15	911	3.41	22	15	1028	3.64	25	15	1077	3.72	26	15
1002		917	3.19	22	15	974	3.32	24	15	1131	3.63	27	15	1199	3.75	29	15
1052		970	3.16	23	15	1030	3.28	25	15	1196	3.58	29	15	1271	3.71	31	16
1152		1160	3.37	28	15	1220	3.47	30	15	1384	3.71	34	15	1454	3.81	35	16
1252		1145	3.34	28	15	1219	3.48	30	15	1418	3.81	34	15	1547	3.99	37	15
1352		1222	3.17	30	15	1299	3.30	31	15	1507	3.60	36	15	1640	3.77	40	15
1452		1325	3.15	32	15	1408	3.27	34	15	1630	3.56	39	15	1656	3.60	40	15
1552		1421	3.18	34	15	1507	3.30	37	15	1689	3.54	41	16	1696	3.55	41	17
1652		1720	3.43	42	15	1811	3.53	44	15	2047	3.76	50	15	2080	3.79	50	15
1702		1783	3.42	43	15	1877	3.52	45	15	2121	3.74	51	16	2157	3.77	52	16

Legend
LWT Leaving water temperature, °C
Qh Heating capacity, kW
COP Coefficient of performance, kW/kW
q Condenser water flow rate, l/s
Δp Condenser pressure drop, kPa

Application data
Standard units, refrigerant: R-134a
Evaporator entering/leaving water temperature difference: 3 K
Condenser entering/leaving water temperature difference: 5 K for LWT values <55°C, 8 K for values = 55°C, 10 K for LWT values >55°C
Evaporator and condenser fluid: water
Fouling factor: 0.18 x 10^{-4} (m^2 K)/W

Performances in accordance with EN14511-3:2011.

Heating capacities

Standard-efficiency 30XWH- units with option 150

		Evaporator entering water temperature, °C															
30XWH-	LWT	8				10				15				18			
Opt. 150	°C	Qh	COP	q	Δp	Qh	COP	q	Δp	Qh	COP	q	Δp	Qh	COP	q	Δp
		kW	kW/kW	l/s	kPa	kW	kW/kW	l/s	kPa	kW	kW/kW	l/s	kPa	kW	kW/kW	l/s	kPa
252	30	321	6.44	15	37	341	6.65	16	41	393	7.17	19	53	418	7.41	20	59
302		355	6.39	17	44	376	6.58	18	49	433	7.10	21	63	470	7.44	23	73
352		398	6.34	19	54	422	6.56	20	60	486	7.09	23	78	528	7.39	25	90
402		486	5.81	23	40	519	6.04	25	44	608	6.61	29	58	667	6.95	32	68
452		516	6.15	25	44	551	6.39	26	49	645	6.98	31	64	708	7.33	34	75
552		576	6.09	28	53	615	6.31	30	59	720	6.88	35	77	789	7.22	38	90
602		590	6.27	28	55	626	6.50	30	61	723	7.08	35	78	788	7.44	38	90
652		734	6.09	35	54	782	6.30	38	61	910	6.78	44	78	993	7.06	48	91
702		808	6.17	39	64	860	6.37	41	72	1001	6.86	48	92	1054	7.04	51	101
802		848	6.07	41	70	902	6.27	43	78	1047	6.75	50	101	1049	6.77	50	101
852		927	6.30	45	42	979	6.50	47	47	1116	6.96	54	61	1139	7.03	55	63
1002		1127	6.33	54	56	1203	6.57	58	64	1412	7.18	68	87	1525	7.48	73	102
1052		1192	6.28	57	62	1273	6.52	61	71	1493	7.11	72	97	1620	7.43	78	114
1152		1277	6.53	61	47	1356	6.76	65	53	1571	7.37	75	68	1684	7.66	81	77
1252		1428	6.69	69	44	1525	6.93	73	50	1786	7.51	86	65	1956	7.83	94	77
1352		1514	6.31	73	49	1614	6.52	78	54	1883	7.04	90	71	2057	7.33	99	82
1452		1633	6.30	78	56	1741	6.51	84	62	2029	7.02	97	81	2079	7.12	100	85
1552		1746	6.31	84	65	1859	6.52	89	72	2148	7.01	103	93	2156	7.04	104	93
1652		1864	6.55	90	51	1971	6.75	95	57	2203	7.15	106	70	2163	7.09	104	68
1702		1928	6.55	93	55	2038	6.75	98	61	2296	7.17	110	77	2274	7.15	109	76
252	35	317	5.81	15	36	336	6.00	16	39	386	6.46	19	51	409	6.66	20	56
302		350	5.74	17	42	370	5.92	18	47	425	6.37	20	60	461	6.66	22	69
352		393	5.69	19	52	416	5.88	20	58	478	6.36	23	74	519	6.63	25	85
402		472	5.24	23	37	503	5.45	24	41	589	5.99	28	53	645	6.30	31	62
452		500	5.54	24	41	533	5.76	26	46	624	6.32	30	60	-	-	-	-
552		558	5.49	27	49	595	5.70	29	55	696	6.22	33	71	763	6.54	37	83
602		581	5.66	28	53	616	5.86	30	58	709	6.38	34	74	770	6.71	37	85
652		711	5.52	34	50	757	5.72	36	56	880	6.17	42	72	959	6.43	46	84
702		782	5.58	38	60	832	5.77	40	66	967	6.22	47	85	1015	6.39	49	92
802		822	5.53	40	65	871	5.71	42	72	1009	6.16	49	92	1068	6.34	51	101
852		917	5.73	44	40	968	5.91	47	45	1102	6.33	53	58	1169	6.52	56	65
1002		1090	5.70	52	51	1164	5.93	56	58	1363	6.49	66	80	1468	6.77	71	92
1052		1154	5.66	56	57	1231	5.88	59	65	1442	6.43	69	89	1559	6.72	75	104
1152		1254	5.89	60	45	1330	6.10	64	50	1535	6.64	74	64	1640	6.90	79	72
1252		1360	6.00	65	40	1442	6.20	69	44	1686	6.75	81	58	1849	7.06	89	68
1352		1463	5.72	70	45	1560	5.93	75	50	1818	6.42	87	65	1985	6.69	96	76
1452		1579	5.71	76	51	1682	5.91	81	57	1959	6.39	94	75	2005	6.48	96	78
1552		1689	5.77	81	60	1796	5.97	86	66	2071	6.42	100	85	2079	6.44	100	86
1652		1839	5.95	89	49	1944	6.13	94	54	2217	6.56	107	69	2266	6.64	109	72
1702		1905	5.96	92	53	2013	6.14	97	59	2293	6.56	110	75	2345	6.65	113	78
252	40	313	5.23	15	34	331	5.40	16	38	380	5.82	18	48	401	5.99	19	53
302		346	5.15	17	41	365	5.31	18	45	418	5.71	20	57	-	-	-	-
352		388	5.10	19	50	410	5.27	20	55	470	5.70	23	70	509	5.94	25	81
402		457	4.71	22	34	487	4.91	23	38	569	5.40	27	49	623	5.70	30	58
452		484	4.97	23	38	516	5.18	25	42	602	5.69	29	55	-	-	-	-
552		541	4.93	26	46	576	5.12	28	51	672	5.60	32	66	735	5.89	35	77
602		573	5.10	28	50	606	5.28	29	55	695	5.74	34	70	754	6.03	36	80
652		687	4.97	33	47	731	5.15	35	52	850	5.58	41	67	926	5.82	45	77
702		756	5.01	36	55	805	5.19	39	61	933	5.61	45	78	977	5.75	47	85
802		795	4.99	38	60	831	5.11	40	65	932	5.44	45	79	1006	5.66	48	90
852		907	5.18	44	38	956	5.34	46	43	1087	5.71	52	55	1150	5.88	55	62
1002		1054	5.12	51	47	1124	5.33	54	53	1315	5.84	63	73	1411	6.09	68	83
1052		1115	5.08	54	52	1189	5.28	57	59	1391	5.80	67	81	1499	6.05	72	94
1152		1233	5.30	59	43	1305	5.49	63	47	1502	5.97	72	60	1598	6.19	77	67
1252		1303	5.36	63	36	1366	5.52	66	39	1566	5.98	75	50	1709	6.27	82	58
1352		1413	5.15	68	41	1506	5.34	73	46	1753	5.80	84	60	1913	6.07	92	70
1452		1525	5.13	73	47	1624	5.32	78	53	1890	5.78	91	69	1931	5.85	93	71
1552		1616	5.18	78	54	1698	5.33	82	59	1944	5.74	94	75	2002	5.84	96	79
1652		1814	5.37	87	46	1916	5.54	92	51	2182	5.92	105	66	2228	5.99	107	68
1702		1881	5.38	91	50	1986	5.55	96	56	2258	5.93	109	71	2307	6.00	111	74
252	45	309	4.71	15	33	327	4.86	16	36	373	5.23	18	46	394	5.38	19	50
302		341	4.62	16	39	360	4.77	17	43	411	5.11	20	54	442	5.33	21	62
352		383	4.58	18	48	404	4.72	20	52	462	5.10	22	67	500	5.32	24	76
402		443	4.22	21	32	471	4.40	23	35	550	4.85	27	46	-	-	-	-
452		468	4.45	23	35	498	4.64	24	39	581	5.11	28	51	632	5.37	31	58
552		523	4.41	25	42	556	4.58	27	47	648	5.02	31	61	708	5.29	34	70
602		565	4.58	27	48	597	4.74	29	53	682	5.15	33	66	739	5.41	36	76
652		664	4.44	32	43	706	4.61	34	48	819	5.01	40	61	892	5.24	43	71
702		731	4.47	35	51	777	4.63	37	57	900	5.03	43	72	938	5.14	45	78
802		769	4.46	37	56	816	4.61	39	62	919	4.93	44	76	977	5.10	47	84
852		896	4.65	43	37	944	4.79	46	41	1072	5.14	52	52	1131	5.28	55	58
1002		1018	4.58	49	43	1084	4.77	52	49	1266	5.24	61	66	1354	5.46	65	75
1052		1077	4.54	52	48	1147	4.73	55	54	1340	5.20	65	74	1439	5.42	69	85
1152		1212	4.75	59	41	1282	4.92	62	45	1469	5.35	71	57	1559	5.54	75	63
1252		1275	4.84	62	34	1334	4.98	64	37	1498	5.34	72	45	1622	5.59	78	52
1352		1363	4.61	66	38	1452	4.79	70	42	1688	5.21	81	55	1841	5.46	89	64
1452		1472	4.58	71	44	1567	4.76	76	49	1821	5.18	88	63	1858	5.25	90	65
1552		1575	4.66	76	51	1660	4.81	80	56	1858	5.14	90	68	1926	5.24	93	72
1652		1789	4.82	86	44	1888	4.97	91	49	2146	5.33	104	63	2188	5.38	106	65
1702		1856	4.83	90	48	1958	4.98	94	53	2223	5.33	107	68	2268	5.39	109	71

Legend

LWT Leaving water temperature, °C
Qh Heating capacity, kW
COP Coefficient of performance, kW/kW
q Condenser water flow rate, l/s
Δp Condenser pressure drop, kPa

Application data

Standard units, refrigerant: R-134a
Evaporator entering/leaving water temperature difference: 3 K
Condenser entering/leaving water temperature difference: 5 K for LWT values <55°C, 8 K for values = 55°C, 10 K for LWT values >55°C
Evaporator and condenser fluid: water
Fouling factor: 0.18 x 10^{-4} (m^2 K)/W
Gross performances, not in accordance with EN14511-3:2011. These performances do not take into account the correction for the proportional heating capacity and power input generated by the water pump to overcome the internal pressure drop in the heat exchanger.

Heating capacities

Standard-efficiency 30XWH- units with option 150 (continued)

		Evaporator entering water temperature, °C															
30XWH-	LWT	8				10				15				18			
Opt. 150	°C	Qh	COP	q	Δp	Qh	COP	q	Δp	Qh	COP	q	Δp	Qh	COP	q	Δp
		kW	kW/kW	l/s	kPa	kW	kW/kW	l/s	kPa	kW	kW/kW	l/s	kPa	kW	kW/kW	l/s	kPa
252	50	305	4.24	15	31	322	4.37	16	34	367	4.70	18	43	386	4.83	19	47
302		337	4.15	16	37	355	4.28	17	41	404	4.58	20	51	433	4.76	21	58
352		378	4.11	18	46	398	4.23	19	50	454	4.57	22	63	490	4.76	24	72
402		429	3.78	21	29	456	3.94	22	33	530	4.34	26	42	579	4.59	28	49
452		452	3.98	22	33	481	4.14	23	36	560	4.57	27	47	606	4.80	29	54
552		505	3.93	24	39	537	4.09	26	43	624	4.49	30	56	681	4.72	33	65
602		557	4.12	27	46	588	4.25	28	51	670	4.60	32	63	724	4.83	35	72
652		641	3.95	31	40	681	4.11	33	44	789	4.48	38	57	858	4.70	41	65
702		706	3.97	34	47	750	4.12	36	52	867	4.49	42	67	901	4.59	44	71
802		743	3.96	36	52	788	4.10	38	57	908	4.45	44	73	948	4.56	46	78
852		885	4.16	43	35	932	4.29	45	39	1056	4.60	51	50	1111	4.73	54	55
1002		982	4.08	47	39	1045	4.25	51	44	1218	4.68	59	60	1298	4.87	63	68
1052		1039	4.05	50	44	1106	4.22	53	49	1289	4.64	62	67	1379	4.83	67	77
1152		1193	4.26	58	39	1259	4.41	61	43	1438	4.77	69	54	1520	4.94	73	59
1252		1234	4.31	60	32	1313	4.49	63	35	1481	4.84	72	44	1578	5.03	76	49
1352		1313	4.10	63	35	1398	4.27	68	39	1624	4.66	78	51	1769	4.89	86	59
1452		1420	4.07	69	40	1511	4.23	73	45	1752	4.63	85	58	1785	4.68	86	60
1552		1519	4.14	73	47	1614	4.30	78	52	1844	4.66	89	65	1852	4.68	90	66
1652		1764	4.32	85	42	1860	4.45	90	47	2110	4.77	102	59	2149	4.83	104	62
1702		1830	4.33	88	46	1929	4.46	93	51	2186	4.77	106	65	2228	4.82	108	67
252	55	302	3.84	9	15	318	3.97	10	15	361	4.29	11	18	380	4.42	11	20
302		333	3.78	10	16	351	3.90	11	17	398	4.20	12	22	425	4.35	13	24
352		373	3.73	11	19	393	3.86	12	21	448	4.16	14	27	483	4.34	15	30
402		416	3.39	13	15	442	3.54	13	15	513	3.92	16	18	558	4.14	17	20
452		438	3.57	13	15	466	3.72	14	15	541	4.12	16	20	584	4.33	18	22
552		489	3.53	15	17	520	3.68	16	18	603	4.05	18	24	655	4.26	20	27
602		551	3.73	17	20	580	3.86	18	22	659	4.18	20	27	711	4.37	21	31
652		620	3.55	19	17	659	3.70	20	19	763	4.05	23	24	830	4.26	25	28
702		684	3.57	21	20	726	3.71	22	22	839	4.06	25	28	870	4.15	26	30
802		721	3.55	22	22	764	3.69	23	24	880	4.02	27	31	915	4.11	28	33
852		876	3.78	26	15	922	3.90	28	15	1043	4.19	32	19	1095	4.31	33	21
1002		949	3.66	29	15	1010	3.82	31	16	1175	4.22	36	22	1249	4.39	38	25
1052		1004	3.63	30	16	1068	3.79	32	18	1243	4.18	38	24	1326	4.35	40	28
1152		1175	3.85	36	16	1239	3.98	37	18	1410	4.31	43	23	1487	4.46	45	25
1252		1190	3.86	36	15	1268	4.03	38	15	1466	4.43	44	19	1576	4.63	48	21
1352		1268	3.66	38	15	1349	3.82	41	16	1566	4.20	47	21	1706	4.42	52	24
1452		1373	3.64	42	17	1460	3.80	44	19	1692	4.17	51	24	1721	4.23	52	25
1552		1471	3.71	44	19	1562	3.86	47	21	1780	4.20	54	27	1788	4.21	54	27
1652		1742	3.91	53	17	1835	4.04	56	18	2079	4.34	63	23	2115	4.39	64	24
1702		1807	3.92	55	18	1904	4.04	58	20	2155	4.34	65	25	2194	4.39	66	26
252	60	298	3.47	7	15	314	3.59	8	15	356	3.89	9	15	372	4.00	9	15
302		329	3.42	8	15	346	3.53	8	15	392	3.80	9	15	417	3.94	10	16
352		368	3.36	9	15	388	3.48	9	15	440	3.75	11	17	474	3.91	11	20
402		403	3.03	10	15	428	3.16	10	15	495	3.50	12	15	535	3.70	13	15
452		423	3.18	10	15	449	3.32	11	15	521	3.68	13	15	560	3.86	14	15
552		473	3.15	11	15	502	3.28	12	15	581	3.62	14	15	628	3.81	15	17
602		544	3.36	13	15	572	3.47	14	15	648	3.76	16	18	697	3.93	17	20
652		599	3.16	15	15	636	3.30	15	15	735	3.63	18	15	799	3.82	19	18
702		661	3.17	16	15	701	3.31	17	15	809	3.63	20	18	836	3.71	20	19
802		698	3.16	17	15	740	3.29	18	16	850	3.59	21	20	881	3.68	21	21
852		866	3.40	21	15	910	3.52	22	15	1028	3.78	25	15	1076	3.89	26	15
1002		916	3.26	22	15	973	3.41	24	15	1130	3.77	27	15	1197	3.92	29	15
1052		969	3.23	23	15	1029	3.37	25	15	1195	3.73	29	15	1270	3.88	31	16
1152		1158	3.46	28	15	1219	3.58	30	15	1383	3.87	34	15	1453	3.99	35	16
1252		1144	3.42	28	15	1218	3.58	30	15	1417	3.96	34	15	1546	4.19	37	15
1352		1220	3.25	30	15	1298	3.39	31	15	1505	3.75	36	15	1638	3.96	40	15
1452		1324	3.23	32	15	1407	3.37	34	15	1628	3.72	39	15	1654	3.77	40	15
1552		1420	3.28	34	15	1507	3.42	37	15	1689	3.70	41	16	1696	3.72	41	17
1652		1719	3.52	42	15	1809	3.64	44	15	2045	3.92	50	15	2078	3.96	50	15
1702		1782	3.52	43	15	1876	3.64	45	15	2120	3.91	51	16	2156	3.95	52	16

Legend
LWT Leaving water temperature, °C
Qh Heating capacity, kW
COP Coefficient of performance, kW/kW
q Condenser water flow rate, l/s
Δp Condenser pressure drop, kPa

Application data
Standard units, refrigerant: R-134a
Evaporator entering/leaving water temperature difference: 3 K
Condenser entering/leaving water temperature difference: 5 K for LWT values <55°C, 8 K for values = 55°C, 10 K for LWT values >55°C
Evaporator and condenser fluid: water
Fouling factor: 0.18 x 10^{-4} (m^2 K)/W

Gross performances, not in accordance with EN14511-3:2011. These performances do not take into account the correction for the proportional heating capacity and power input generated by the water pump to overcome the internal pressure drop in the heat exchanger.

Cooling capacities in accordance with EN14511-3 : 2011

High-efficiency 30XW-P units

		Condenser entering water temperature, °C																			
30XW-P	LWT °C	25				30				35				40				45			
		Qc kW	EER kW/kW	q l/s	Δp kPa	Qc kW	EER kW/kW	q l/s	Δp kPa	Qc kW	EER kW/kW	q l/s	Δp kPa	Qc kW	EER kW/kW	q l/s	Δp kPa	Qc kW	EER kW/kW	q l/s	Δp kPa
512	5	490	6.26	23	25	473	5.28	23	23	455	4.45	22	22	437	3.73	21	20	417	3.13	20	19
562		555	6.17	26	30	535	5.20	26	29	515	4.37	25	27	493	3.66	24	25	471	3.07	22	23
712		710	6.42	34	28	685	5.40	33	27	660	4.53	32	25	633	3.79	30	23	604	3.16	29	21
812		758	6.21	36	33	731	5.21	35	31	703	4.36	34	29	673	3.64	32	27	642	3.03	31	24
862		829	6.22	40	39	800	5.26	38	37	768	4.43	37	34	733	3.72	35	32	696	3.12	33	29
1012		1003	6.31	48	40	968	5.32	46	37	932	4.48	45	35	894	3.76	43	32	854	3.15	41	29
1162		1118	6.35	53	55	1077	5.36	51	51	1035	4.50	49	47	991	3.78	47	44	945	3.16	45	40
1312		1271	6.50	61	35	1226	5.46	59	32	1180	4.58	56	30	1131	3.83	54	27	1078	3.20	51	25
1462		1419	6.48	68	42	1370	5.45	65	40	1319	4.57	63	37	1263	3.82	60	34	1204	3.19	57	30
1612		1569	6.51	75	52	1514	5.47	72	48	1455	4.58	70	45	1393	3.82	67	41	1326	3.18	63	37
1762		1694	6.39	81	60	1633	5.40	78	56	1568	4.55	75	52	1498	3.82	72	47	1422	3.19	68	43
512	7	517	6.59	25	27	505	5.63	24	26	486	4.74	23	24	466	3.97	22	23	445	3.33	21	21
562		592	6.57	28	34	571	5.54	27	32	549	4.65	26	30	526	3.90	25	27	502	3.27	24	25
712		758	6.84	36	32	732	5.75	35	30	704	4.83	34	28	675	4.04	32	26	644	3.37	31	24
812		808	6.59	39	37	780	5.53	37	34	750	4.64	36	32	718	3.87	34	30	684	3.22	33	27
862		884	6.57	42	44	853	5.56	41	41	819	4.69	39	38	782	3.94	37	35	743	3.30	36	32
1012		1054	6.62	50	44	1035	5.68	49	42	995	4.78	48	39	954	4.01	46	36	911	3.36	44	33
1162		1164	6.59	56	59	1150	5.71	55	58	1105	4.80	53	53	1058	4.02	51	49	1009	3.37	48	45
1312		1353	6.90	65	39	1309	5.82	63	36	1259	4.88	60	34	1207	4.09	58	31	1151	3.41	55	28
1462		1515	6.88	72	48	1463	5.79	70	45	1407	4.86	67	41	1348	4.07	64	38	1285	3.39	61	34
1612		1672	6.90	80	58	1614	5.81	77	54	1551	4.86	74	50	1485	4.06	71	46	1414	3.38	68	42
1762		1809	6.77	87	67	1742	5.72	83	63	1673	4.82	80	58	1598	4.05	76	53	1518	3.39	73	48
512	10	542	6.88	26	29	550	6.11	26	30	535	5.20	26	28	512	4.36	25	26	489	3.66	23	24
562		622	6.87	30	37	629	6.07	30	37	604	5.10	29	35	579	4.28	28	32	552	3.58	26	29
712		813	7.30	39	35	805	6.29	39	35	774	5.28	37	32	742	4.42	36	30	708	3.68	34	28
812		877	7.08	42	42	856	6.02	41	40	823	5.05	39	37	788	4.22	38	34	751	3.51	36	32
862		952	7.01	46	49	936	6.03	45	48	899	5.08	43	44	859	4.27	41	41	816	3.58	39	37
1012		1102	6.91	53	47	1120	6.13	54	48	1096	5.25	53	46	1050	4.41	50	43	1002	3.69	48	39
1162		1220	6.88	59	64	1234	6.08	59	65	1216	5.25	58	63	1164	4.40	56	58	1109	3.69	53	53
1312		1449	7.35	69	44	1436	6.35	69	43	1386	5.35	66	40	1327	4.48	64	37	1265	3.73	61	34
1462		1657	7.45	79	57	1609	6.32	77	53	1547	5.31	74	49	1482	4.44	71	45	1412	3.70	68	41
1612		1769	7.26	85	63	1774	6.32	85	64	1704	5.30	82	59	1630	4.42	78	54	1552	3.68	74	49
1762		1910	7.09	92	73	1918	6.21	92	74	1837	5.23	88	68	1755	4.40	84	62	1667	3.69	80	57
512	15	576	7.28	28	32	588	6.50	28	33	603	5.83	29	35	598	5.06	29	34	570	4.24	27	31
562		660	7.25	32	40	675	6.48	32	41	695	5.81	33	44	675	4.95	32	41	643	4.14	31	38
712		872	7.77	42	39	888	6.86	43	40	902	6.05	43	42	864	5.07	41	38	823	4.23	39	35
812		938	7.51	45	46	965	6.69	46	48	957	5.77	46	48	915	4.82	44	44	871	4.01	42	40
862		1019	7.42	49	54	1038	6.58	50	56	1046	5.79	50	57	999	4.87	48	52	949	4.09	46	48
1012		1181	7.36	57	52	1199	6.54	58	54	1226	5.85	59	56	1227	5.12	59	56	1170	4.29	56	51
1162		1307	7.31	63	71	1321	6.46	64	72	1355	5.78	65	76	1359	5.08	65	76	1293	4.25	62	69
1312		1573	7.92	76	51	1596	6.99	77	52	1597	6.10	77	52	1548	5.17	74	49	1474	4.32	71	45
1462		1803	8.01	87	66	1827	7.06	88	67	1803	6.08	87	66	1725	5.10	83	60	1643	4.25	79	54
1612		1918	7.78	92	72	1953	6.87	94	74	1980	6.04	95	76	1894	5.06	91	70	1803	4.22	87	64
1762		2071	7.57	100	84	2100	6.69	101	86	2128	5.90	102	88	2042	4.99	98	81	1938	4.19	93	74
512	18	601	7.57	29	34	607	6.70	29	34	626	6.04	30	36	645	5.44	31	39	624	4.61	30	36
562		681	7.45	33	41	697	6.67	34	43	718	5.98	35	46	738	5.37	35	48	703	4.50	34	44
712		900	7.98	43	41	926	7.11	45	43	954	6.36	46	45	943	5.49	45	44	898	4.57	43	41
812		975	7.77	47	49	1002	6.91	48	51	1035	6.18	50	54	1000	5.21	48	51	951	4.34	46	47
862		1061	7.68	51	58	1079	6.80	52	59	1114	6.09	54	63	1090	5.24	52	60	1036	4.40	50	55
1012		1227	7.62	59	55	1244	6.77	60	57	1275	6.06	61	60	1311	5.45	63	63	1278	4.66	61	60
1162		1359	7.55	65	75	1383	6.72	67	78	1413	6.00	68	81	1450	5.38	70	85	1411	4.60	68	81
1312		1648	8.24	79	55	1657	7.23	80	56	1696	6.43	82	58	-	-	-	-	1611	4.68	77	53
1462		1883	8.30	91	71	1909	7.31	92	73	1946	6.47	94	75	1883	5.49	91	71	1791	4.58	86	64
1612		2000	8.05	96	77	2038	7.11	98	80	2085	6.30	100	83	2063	5.43	99	81	1958	4.52	94	74
1762		2170	7.85	105	90	2187	6.90	105	91	2235	6.13	108	95	2222	5.33	107	94	2106	4.48	101	85

Legend
LWT Leaving water temperature, °C
Qc Cooling capacity, kW
EER Energy efficiency ratio, kW/kW
q Evaporator water flow rate, l/s
Δp Evaporator pressure drop, kPa

Application data
Standard units, refrigerant: R-134a
Evaporator and condenser entering/leaving water temperature difference: 5 K
Evaporator and condenser fluid: water
Fouling factor: 0.18 x 10^{-4} (m^2 K)/W

Performances in accordance with EN14511-3:2011.

Cooling capacities

High-efficiency 30XW-P units

		Condenser entering water temperature, °C																			
30XW-P	LWT °C	25				30				35				40				45			
		Qc kW	EER kW/kW	q l/s	Δp kPa	Qc kW	EER kW/kW	q l/s	Δp kPa	Qc kW	EER kW/kW	q l/s	Δp kPa	Qc kW	EER kW/kW	q l/s	Δp kPa	Qc kW	EER kW/kW	q l/s	Δp kPa
512	5	491	6.51	23	25	474	5.45	23	23	456	4.57	22	22	438	3.82	21	20	418	3.19	20	19
562		556	6.45	26	30	536	5.40	26	29	516	4.50	25	27	494	3.76	24	25	472	3.13	22	23
712		711	6.66	34	28	687	5.56	33	27	661	4.65	32	25	634	3.87	30	23	605	3.22	29	21
812		759	6.46	36	33	733	5.39	35	31	705	4.49	34	29	675	3.73	32	27	643	3.09	31	24
862		832	6.52	40	39	802	5.47	38	37	770	4.58	37	34	735	3.82	35	32	698	3.18	33	29
1012		1006	6.56	48	40	971	5.49	46	37	934	4.60	45	35	896	3.84	43	32	855	3.21	41	29
1162		1122	6.69	53	55	1081	5.59	51	51	1038	4.66	49	47	994	3.89	47	44	948	3.24	45	40
1312		1274	6.75	61	35	1229	5.63	59	32	1183	4.70	56	30	1133	3.92	54	27	1081	3.25	51	25
1462		1423	6.77	68	42	1374	5.65	65	40	1322	4.71	63	37	1266	3.92	60	34	1207	3.25	57	30
1612		1574	6.81	75	52	1519	5.68	72	48	1460	4.72	70	45	1397	3.91	67	41	1330	3.24	63	37
1762		1700	6.73	81	60	1639	5.63	78	56	1574	4.71	75	52	1503	3.92	72	47	1427	3.27	68	43
512	7	519	6.89	25	27	506	5.84	24	26	487	4.88	23	24	467	4.08	22	23	446	3.41	21	21
562		594	6.91	28	34	573	5.78	27	32	551	4.82	26	30	527	4.02	25	27	503	3.35	24	25
712		759	7.13	36	32	733	5.95	35	30	706	4.96	34	28	677	4.13	32	26	645	3.43	31	24
812		810	6.90	39	37	782	5.75	37	34	752	4.78	36	32	720	3.97	34	30	685	3.29	33	27
862		887	6.93	42	44	855	5.81	41	41	821	4.87	39	38	784	4.06	37	35	745	3.38	36	32
1012		1057	6.91	50	44	1038	5.89	49	42	998	4.93	48	39	957	4.11	46	36	913	3.43	44	33
1162		1169	6.98	56	59	1155	5.99	55	58	1109	4.99	53	53	1061	4.16	51	49	1012	3.46	48	45
1312		1357	7.21	65	39	1313	6.04	63	36	1263	5.03	60	34	1210	4.19	58	31	1154	3.48	55	28
1462		1520	7.25	72	48	1467	6.04	70	45	1411	5.03	67	41	1352	4.19	64	38	1288	3.47	61	34
1612		1679	7.27	80	58	1620	6.06	77	54	1557	5.04	74	50	1490	4.17	71	46	1418	3.45	68	42
1762		1817	7.18	87	67	1749	6.00	83	63	1679	5.02	80	58	1604	4.18	76	53	1523	3.48	73	48
512	10	543	7.22	26	29	551	6.38	26	30	536	5.40	26	28	514	4.50	25	26	490	3.75	23	24
562		623	7.27	30	37	631	6.39	30	37	606	5.32	29	35	580	4.43	28	32	553	3.69	26	29
712		815	7.66	39	35	807	6.56	39	35	776	5.47	37	32	744	4.54	36	30	709	3.77	34	28
812		880	7.48	42	42	859	6.31	41	40	826	5.25	39	37	790	4.35	38	34	753	3.60	36	32
862		956	7.46	46	49	940	6.36	45	48	902	5.31	43	44	861	4.43	41	41	818	3.69	39	37
1012		1106	7.24	53	47	1124	6.40	54	48	1099	5.45	53	46	1053	4.54	50	43	1005	3.79	48	39
1162		1226	7.32	59	64	1240	6.44	59	65	1221	5.51	58	63	1168	4.58	56	58	1113	3.81	53	53
1312		1453	7.74	69	44	1440	6.64	69	43	1390	5.55	66	40	1331	4.61	64	37	1268	3.83	61	34
1462		1663	7.94	79	57	1614	6.66	77	53	1552	5.54	74	49	1486	4.60	71	45	1416	3.81	68	41
1612		1776	7.70	85	63	1781	6.67	85	64	1710	5.54	82	59	1636	4.58	78	54	1557	3.79	74	49
1762		1919	7.58	92	73	1927	6.60	92	74	1845	5.49	88	68	1762	4.57	84	62	1674	3.81	80	57
512	15	578	7.69	28	32	590	6.84	28	33	605	6.12	29	35	599	5.28	29	34	572	4.39	27	31
562		662	7.72	32	40	678	6.88	32	41	697	6.15	33	44	677	5.19	32	41	645	4.31	31	38
712		875	8.22	42	39	890	7.22	43	40	905	6.35	43	42	866	5.27	41	38	825	4.36	39	35
812		942	7.99	45	46	968	7.09	46	48	961	6.08	46	48	918	5.02	44	44	874	4.15	42	40
862		1023	7.97	49	54	1042	7.03	50	56	1050	6.15	50	57	1003	5.12	48	52	952	4.26	46	48
1012		1185	7.76	57	52	1204	6.87	58	54	1231	6.13	59	56	1232	5.34	59	56	1174	4.44	56	51
1162		1314	7.85	63	71	1328	6.90	64	72	1362	6.15	65	76	1366	5.37	65	76	1299	4.45	62	69
1312		1579	8.42	76	51	1601	7.40	77	52	1602	6.41	77	52	1553	5.40	74	49	1479	4.47	71	45
1462		1811	8.64	87	66	1835	7.56	88	67	1811	6.46	87	66	1732	5.35	83	60	1649	4.42	79	54
1612		1926	8.35	92	72	1962	7.33	94	74	1990	6.42	95	76	1903	5.31	91	70	1810	4.38	87	64
1762		2081	8.20	100	84	2111	7.19	101	86	2139	6.31	102	88	2052	5.27	98	81	1947	4.38	93	74
512	18	603	8.04	29	34	609	7.07	29	34	628	6.35	30	36	647	5.71	31	39	625	4.81	30	36
562		683	7.98	33	41	699	7.10	34	43	720	6.35	35	46	740	5.68	35	48	705	4.71	34	44
712		902	8.47	43	41	929	7.52	45	43	957	6.70	46	45	946	5.75	45	44	901	4.75	43	41
812		979	8.31	47	49	1005	7.36	48	51	1039	6.56	50	54	1003	5.48	48	51	954	4.52	46	47
862		1066	8.30	51	58	1083	7.30	52	59	1118	6.52	54	63	1095	5.55	52	60	1040	4.61	50	55
1012		1232	8.08	59	55	1249	7.14	60	57	1280	6.38	61	60	1317	5.72	63	63	1283	4.85	61	60
1162		1366	8.17	65	75	1390	7.22	67	78	1421	6.41	68	81	1458	5.73	70	85	1418	4.86	68	81
1312		1654	8.82	79	55	1663	7.68	80	56	1703	6.81	82	58	-	-	-	-	1617	4.88	77	53
1462		1891	9.02	91	71	1917	7.89	92	73	1955	6.94	94	75	1891	5.82	91	71	1798	4.80	86	64
1612		2009	8.70	96	77	2048	7.64	98	80	2095	6.74	100	83	2073	5.75	99	81	1967	4.74	94	74
1762		2182	8.57	105	90	2199	7.47	105	91	2248	6.60	108	95	2234	5.69	107	94	2117	4.72	101	85

Legend
LWT Leaving water temperature, °C
Qc Cooling capacity, kW
EER Energy efficiency ratio, kW/kW
q Evaporator water flow rate, l/s
Δp Evaporator pressure drop, kPa

Application data
Standard units, refrigerant: R-134a
Evaporator and condenser entering/leaving water temperature difference: 5 K
Evaporator and condenser fluid: water
Fouling factor: 0.18 x 10^{-4} (m^2 K)/W

Gross performances, not in accordance with EN14511-3:2011. These performances do not take into account the correction for the proportional heating capacity and power input generated by the water pump to overcome the internal pressure drop in the heat exchanger.

Heating capacities in accordance with EN14511-3 : 2011

High-efficiency 30XWHP units

		Evaporator entering water temperature, °C															
30XWHP	LWT °C	8				10				15				18			
		Qh kW	COP kW/kW	q l/s	Δp kPa	Qh kW	COP kW/kW	q l/s	Δp kPa	Qh kW	COP kW/kW	q l/s	Δp kPa	Qh kW	COP kW/kW	q l/s	Δp kPa
512	30	566	7.00	27	41	594	7.30	28	44	639	7.75	31	50	659	7.95	32	53
562		642	6.88	31	49	680	7.22	33	54	730	7.65	35	61	757	7.87	36	65
712		816	7.14	39	34	864	7.50	41	38	948	8.08	45	45	990	8.34	47	49
812		876	6.91	42	40	927	7.23	44	44	1026	7.80	49	53	1070	8.04	51	58
862		958	6.88	46	48	1014	7.17	49	53	1114	7.66	53	63	1163	7.89	56	68
1012		1158	6.95	55	33	1209	7.21	58	36	1296	7.61	62	41	1350	7.85	65	44
1162		1287	6.87	62	44	1335	7.05	64	47	1432	7.41	69	53	1496	7.61	72	57
1312		1459	7.13	70	36	1543	7.46	74	40	1703	8.04	82	48	1779	8.28	85	52
1462		1631	7.06	78	44	1728	7.38	83	49	1942	7.99	93	61	2030	8.21	97	66
1612		1803	7.06	86	36	1906	7.36	91	41	2075	7.80	99	49	2175	8.03	104	54
1762		1954	6.91	94	43	2067	7.18	99	49	2250	7.56	108	58	2351	7.75	112	64
512	35	560	6.09	27	39	592	6.40	28	43	655	6.98	31	51	682	7.23	33	55
562		635	5.99	30	47	671	6.29	32	52	754	6.93	36	63	780	7.12	37	67
712		809	6.20	39	33	855	6.51	41	37	976	7.25	47	46	1022	7.51	49	50
812		868	6.00	42	39	916	6.28	44	43	1048	6.96	50	54	1108	7.25	53	60
862		947	6.02	45	46	1001	6.27	48	51	1146	6.91	55	65	1195	7.11	57	70
1012		1146	6.07	55	32	1211	6.37	58	35	1333	6.89	64	42	1383	7.09	66	44
1162		1272	6.02	61	42	1346	6.29	65	46	1475	6.72	71	54	1529	6.88	73	58
1312		1443	6.20	69	35	1526	6.51	73	38	1728	7.17	83	48	1820	7.45	87	53
1462		1615	6.16	77	42	1707	6.44	82	47	1959	7.11	94	60	2083	7.39	100	67
1612		1782	6.15	86	35	1884	6.42	90	39	2130	7.01	102	50	2234	7.22	107	56
1762		1929	6.06	93	41	2040	6.31	98	46	2300	6.81	110	59	2409	7.00	115	65
512	40	555	5.31	27	38	585	5.57	28	41	668	6.27	32	52	705	6.56	34	56
562		630	5.22	30	46	664	5.48	32	50	758	6.14	36	62	813	6.49	39	70
712		802	5.39	39	32	846	5.65	41	35	966	6.32	46	45	1045	6.72	50	51
812		860	5.21	41	37	907	5.46	44	41	1033	6.05	50	52	1117	6.42	54	60
862		936	5.25	45	44	988	5.48	47	48	1127	6.05	54	61	1219	6.39	58	71
1012		1135	5.30	55	31	1198	5.56	58	34	1370	6.23	66	43	1431	6.45	69	46
1162		1259	5.26	61	40	1329	5.50	64	44	1517	6.08	73	56	1585	6.26	76	60
1312		1430	5.40	69	33	1509	5.66	73	37	1725	6.32	83	47	1850	6.66	89	54
1462		1600	5.37	77	41	1688	5.61	81	45	1929	6.22	93	57	2088	6.56	100	66
1612		1762	5.35	85	33	1861	5.59	89	37	2127	6.18	102	49	2297	6.50	110	58
1762		1904	5.30	92	39	2011	5.53	97	44	2300	6.06	110	58	2476	6.33	119	68
512	45	551	4.63	26	36	580	4.86	28	40	659	5.45	32	49	712	5.83	34	56
562		625	4.55	30	44	658	4.77	32	48	747	5.34	36	60	806	5.70	39	68
712		795	4.69	38	31	838	4.91	40	34	952	5.49	46	43	1028	5.83	49	49
812		854	4.53	41	36	899	4.74	43	40	1019	5.25	49	50	1099	5.57	53	57
862		925	4.59	45	42	975	4.79	47	46	1109	5.28	53	59	1197	5.59	57	67
1012		1127	4.63	54	30	1187	4.86	57	33	1350	5.43	65	41	1458	5.79	70	47
1162		1247	4.61	60	39	1314	4.82	63	43	1496	5.34	72	53	1616	5.65	78	61
1312		1417	4.70	68	32	1493	4.93	72	35	1699	5.50	82	45	1836	5.85	88	52
1462		1586	4.68	76	39	1671	4.89	80	43	1900	5.43	91	55	2052	5.74	99	63
1612		1745	4.65	84	32	1840	4.86	89	36	2093	5.39	101	47	2260	5.69	109	55
1762		1879	4.64	90	38	1983	4.84	95	42	2259	5.32	109	55	2440	5.59	117	65
512	50	547	4.05	26	35	575	4.24	28	38	650	4.75	31	47	700	5.07	34	54
562		621	3.99	30	43	652	4.17	31	47	737	4.66	35	57	793	4.96	38	65
712		790	4.08	38	30	830	4.27	40	33	939	4.76	45	41	1011	5.06	49	47
812		848	3.95	41	35	891	4.13	43	38	1006	4.57	48	48	1082	4.84	52	54
862		914	4.02	44	41	962	4.19	46	45	1090	4.62	52	56	1173	4.89	56	64
1012		1119	4.06	54	29	1177	4.25	57	32	1332	4.75	64	39	1435	5.06	69	45
1162		1238	4.04	60	38	1301	4.22	63	41	1473	4.68	71	51	1587	4.96	76	58
1312		1407	4.10	68	31	1479	4.29	71	34	1675	4.79	81	43	1804	5.09	87	49
1462		1574	4.08	76	38	1655	4.27	80	42	1873	4.73	90	53	2017	5.01	97	60
1612		1729	4.05	83	31	1819	4.23	88	34	2061	4.69	99	45	2219	4.96	107	52
1762		1854	4.06	89	36	1953	4.24	94	40	2217	4.67	107	52	2390	4.91	115	61
512	55	543	3.60	16	16	570	3.78	17	17	642	4.24	19	21	689	4.53	21	23
562		617	3.57	19	19	647	3.74	20	21	727	4.18	22	25	781	4.46	24	28
712		784	3.62	24	15	822	3.79	25	15	926	4.23	28	17	994	4.50	30	19
812		842	3.52	25	15	883	3.67	27	16	993	4.08	30	20	1065	4.34	32	22
862		903	3.59	27	17	948	3.75	29	18	1071	4.16	32	23	1151	4.41	35	26
1012		1112	3.60	34	15	1167	3.77	35	15	1314	4.22	40	17	1412	4.51	43	19
1162		1228	3.61	37	16	1289	3.77	39	18	1452	4.20	44	22	1559	4.46	47	25
1312		1396	3.65	42	15	1465	3.83	44	15	1652	4.28	50	17	1774	4.56	54	20
1462		1560	3.64	47	16	1638	3.81	49	17	1846	4.23	56	21	1983	4.49	60	24
1612		1714	3.61	52	15	1800	3.78	54	15	2030	4.19	61	16	2181	4.45	66	19
1762		1829	3.64	55	15	1923	3.80	58	15	2176	4.20	66	19	2340	4.44	71	22
512	60	541	3.19	13	15	566	3.34	14	15	634	3.74	15	15	679	3.99	16	15
562		615	3.17	15	15	643	3.31	16	15	720	3.70	17	17	770	3.95	19	19
712		780	3.19	19	15	816	3.34	20	15	915	3.71	22	15	979	3.96	24	15
812		840	3.12	20	15	879	3.25	21	15	983	3.60	24	15	1051	3.82	25	15
862		892	3.18	22	15	936	3.31	23	15	1053	3.68	25	15	1129	3.91	27	17
1012		1107	3.18	27	15	1159	3.33	28	15	1299	3.72	31	15	1392	3.97	34	15
1162		1222	3.20	30	15	1280	3.34	31	15	1434	3.71	35	15	1535	3.95	37	16
1312		1389	3.23	34	15	1455	3.38	35	15	1631	3.77	39	15	1747	4.02	42	15
1462		1551	3.21	38	15	1624	3.36	39	15	1821	3.73	44	15	1950	3.96	47	15
1612		1705	3.19	41	15	1786	3.33	43	15	2004	3.70	49	15	2146	3.92	52	15
1762		1805	3.21	44	15	1896	3.36	46	15	2138	3.72	52	15	2294	3.94	56	15

Legend
LWT Leaving water temperature, °C
Qh Heating capacity, kW
COP Coefficient of performance, kW/kW
q Condenser water flow rate, l/s
Δp Condenser pressure drop, kPa

Application data
Standard units, refrigerant: R-134a
Evaporator entering/leaving water temperature difference: 3 K
Condenser entering/leaving water temperature difference: 5 K for LWT values <55°C, 8 K for values = 55°C, 10 K for LWT values >55°C
Evaporator and condenser fluid: water
Fouling factor: 0.18 x 10^{-4} (m^2 K)/W

Performances in accordance with EN14511-3:2011.

Heating capacities

High-efficiency 30XWHP units

		Evaporator entering water temperature, °C															
30XWHP	LWT °C	8				10				15				18			
		Qh kW	COP kW/kW	q l/s	Δp kPa	Qh kW	COP kW/kW	q l/s	Δp kPa	Qh kW	COP kW/kW	q l/s	Δp kPa	Qh kW	COP kW/kW	q l/s	Δp kPa
512	30	564	7.47	27	41	592	7.86	28	44	636	8.48	31	50	656	8.74	32	53
562		640	7.42	31	49	677	7.88	33	54	727	8.48	35	61	754	8.80	36	65
712		814	7.63	39	34	862	8.09	41	38	945	8.88	45	45	986	9.27	47	49
812		873	7.43	42	40	924	7.87	44	44	1022	8.68	49	53	1065	9.05	51	58
862		955	7.49	46	48	1010	7.90	49	53	1109	8.65	53	63	1158	9.02	56	68
1012		1155	7.53	55	33	1206	7.88	58	36	1292	8.46	62	41	1346	8.82	65	44
1162		1283	7.65	62	44	1331	7.94	64	47	1426	8.53	69	53	1490	8.91	72	57
1312		1455	7.71	70	36	1539	8.18	74	40	1698	9.05	82	48	1773	9.46	85	52
1462		1627	7.74	78	44	1722	8.21	83	49	1935	9.24	93	61	2021	9.65	97	66
1612		1798	7.78	86	36	1901	8.24	91	41	2068	8.97	99	49	2168	9.40	104	54
1762		1948	7.71	94	43	2060	8.15	99	49	2242	8.84	108	58	2342	9.22	112	64
512	35	558	6.42	27	39	590	6.80	28	43	652	7.56	31	51	680	7.89	33	55
562		633	6.37	30	47	669	6.75	32	52	751	7.61	36	63	777	7.88	37	67
712		807	6.53	39	33	852	6.92	41	37	973	7.90	47	46	1018	8.26	49	50
812		865	6.36	42	39	913	6.72	44	43	1044	7.65	50	54	1103	8.08	53	60
862		944	6.44	45	46	997	6.78	48	51	1141	7.72	55	65	1189	8.03	57	70
1012		1143	6.46	55	32	1208	6.86	58	35	1329	7.58	64	42	1379	7.88	66	44
1162		1268	6.56	61	42	1341	6.96	65	46	1470	7.63	71	54	1523	7.91	73	58
1312		1440	6.60	69	35	1522	7.00	73	38	1722	7.95	83	48	1814	8.38	87	53
1462		1610	6.62	77	42	1702	7.01	82	47	1951	8.05	94	60	2074	8.54	100	67
1612		1777	6.64	86	35	1879	7.03	90	39	2123	7.94	102	50	2226	8.31	107	56
1762		1923	6.61	93	41	2034	6.98	98	46	2291	7.83	110	59	2400	8.17	115	65
512	40	553	5.54	27	38	583	5.85	28	41	666	6.72	32	52	702	7.10	34	56
562		627	5.48	30	46	662	5.79	32	50	754	6.64	36	62	809	7.13	39	70
712		800	5.62	39	32	844	5.93	41	35	962	6.78	46	45	1041	7.31	50	51
812		858	5.46	41	37	904	5.76	44	41	1029	6.52	50	52	1112	7.04	54	60
862		933	5.55	45	44	984	5.83	47	48	1123	6.60	54	61	1213	7.10	58	71
1012		1133	5.57	55	31	1195	5.90	58	34	1366	6.79	66	43	1426	7.10	69	46
1162		1255	5.64	61	40	1325	5.96	64	44	1511	6.82	73	56	1578	7.12	76	60
1312		1426	5.67	69	33	1505	6.00	73	37	1719	6.88	83	47	1843	7.38	89	54
1462		1595	5.68	77	41	1683	6.00	81	45	1921	6.86	93	57	2079	7.41	100	66
1612		1758	5.68	85	33	1856	6.00	89	37	2120	6.86	102	49	2288	7.38	110	58
1762		1899	5.68	92	39	2005	5.99	97	44	2292	6.80	110	58	2466	7.27	119	68
512	45	549	4.79	26	36	578	5.05	28	40	657	5.76	32	49	709	6.24	34	56
562		623	4.73	30	44	655	4.99	32	48	744	5.69	36	60	802	6.15	39	68
712		793	4.84	38	31	836	5.10	40	34	949	5.79	46	43	1024	6.24	49	49
812		851	4.70	41	36	896	4.94	43	40	1016	5.57	49	50	1095	5.99	53	57
862		922	4.79	45	42	972	5.03	47	46	1104	5.66	53	59	1191	6.08	57	67
1012		1124	4.82	54	30	1184	5.09	57	33	1346	5.81	65	41	1453	6.30	70	47
1162		1244	4.86	60	39	1310	5.13	63	43	1490	5.85	72	53	1609	6.32	78	61
1312		1414	4.89	68	32	1490	5.16	72	35	1694	5.88	82	45	1829	6.36	88	52
1462		1582	4.90	76	39	1666	5.16	80	43	1893	5.86	91	55	2044	6.32	99	63
1612		1741	4.88	84	32	1835	5.14	89	36	2086	5.84	101	47	2252	6.28	109	55
1762		1874	4.89	90	38	1977	5.15	95	42	2251	5.83	109	55	2430	6.25	117	65
512	50	545	4.17	26	35	573	4.38	28	38	648	4.96	31	47	697	5.35	34	54
562		619	4.11	30	43	650	4.32	31	47	734	4.90	35	57	790	5.27	38	65
712		788	4.19	38	30	828	4.41	40	33	936	4.97	45	41	1007	5.33	49	47
812		846	4.07	41	35	888	4.26	43	38	1003	4.78	48	48	1078	5.12	52	54
862		911	4.16	44	41	959	4.36	46	45	1085	4.88	52	56	1168	5.22	56	64
1012		1117	4.19	54	29	1174	4.41	57	32	1328	5.01	64	39	1430	5.40	69	45
1162		1234	4.22	60	38	1298	4.44	63	41	1468	5.03	71	51	1581	5.41	76	58
1312		1404	4.23	68	31	1476	4.45	71	34	1670	5.04	81	43	1798	5.43	87	49
1462		1570	4.23	76	38	1650	4.45	80	42	1867	5.02	90	53	2009	5.39	97	60
1612		1725	4.21	83	31	1814	4.42	88	34	2055	4.99	99	45	2211	5.35	107	52
1762		1849	4.24	89	36	1947	4.45	94	40	2210	5.01	107	52	2380	5.36	115	61
512	55	543	3.67	16	16	569	3.86	17	17	641	4.36	19	21	688	4.69	21	23
562		616	3.64	19	19	646	3.82	20	21	726	4.32	22	25	779	4.64	24	28
712		783	3.68	24	15	822	3.87	25	15	925	4.35	28	17	993	4.66	30	19
812		841	3.58	25	15	882	3.75	27	16	992	4.20	30	20	1064	4.50	32	22
862		902	3.67	27	17	947	3.84	29	18	1069	4.31	32	23	1149	4.61	35	26
1012		1111	3.68	34	15	1166	3.87	35	15	1313	4.38	40	17	1410	4.72	43	19
1162		1227	3.71	37	16	1287	3.90	39	18	1450	4.41	44	22	1557	4.74	47	25
1312		1395	3.73	42	15	1464	3.92	44	15	1650	4.43	50	17	1773	4.76	54	20
1462		1559	3.72	47	16	1636	3.91	49	17	1844	4.41	56	21	1980	4.72	60	24
1612		1713	3.70	52	15	1798	3.89	54	15	2028	4.38	61	16	2178	4.69	66	19
1762		1827	3.74	55	15	1922	3.93	58	15	2174	4.41	66	19	2338	4.72	71	22
512	60	540	3.23	13	15	565	3.39	14	15	633	3.82	15	15	678	4.10	16	15
562		614	3.22	15	15	643	3.37	16	15	719	3.79	17	17	769	4.07	19	19
712		779	3.24	19	15	816	3.39	20	15	914	3.79	22	15	978	4.06	24	15
812		839	3.16	20	15	878	3.30	21	15	982	3.68	24	15	1050	3.93	25	15
862		891	3.23	22	15	935	3.38	23	15	1052	3.78	25	15	1128	4.04	27	17
1012		1106	3.24	27	15	1158	3.40	28	15	1298	3.83	31	15	1390	4.11	34	15
1162		1221	3.27	30	15	1279	3.43	31	15	1433	3.86	35	15	1534	4.14	37	16
1312		1388	3.28	34	15	1454	3.44	35	15	1630	3.87	39	15	1746	4.15	42	15
1462		1550	3.27	38	15	1623	3.43	39	15	1820	3.84	44	15	1949	4.11	47	15
1612		1704	3.26	41	15	1785	3.41	43	15	2002	3.82	49	15	2144	4.08	52	15
1762		1804	3.28	44	15	1894	3.44	46	15	2136	3.86	52	15	2292	4.12	56	15

Legend
LWT Leaving water temperature, °C
Qh Heating capacity, kW
COP Coefficient of performance, kW/kW
q Condenser water flow rate, l/s
Δp Condenser pressure drop, kPa

Application data
Standard units, refrigerant: R-134a
Evaporator entering/leaving water temperature difference: 3 K
Condenser entering/leaving water temperature difference: 5 K for LWT values <55°C, 8 K for values = 55°C, 10 K for LWT values >55°C
Evaporator and condenser fluid: water
Fouling factor: 0.18 x 10^{-4} (m^2 K)/W

Gross performances, not in accordance with EN14511-3:2011. These performances do not take into account the correction for the proportional heating capacity and power input generated by the water pump to overcome the internal pressure drop in the heat exchanger.

Cooling capacities in accordance with EN14511-3 : 2011

High-efficiency 30XW-P units with option 150

		Condenser entering water temperature, °C																							
30XW-P Opt. 150	LWT °C	25				30				35				40				45				50			
		Qc kW	EER kW/kW	q l/s	Δp kPa	Qc kW	EER kW/kW	q l/s	Δp kPa	Qc kW	EER kW/kW	q l/s	Δp kPa	Qc kW	EER kW/kW	q l/s	Δp kPa	Qc kW	EER kW/kW	q l/s	Δp kPa	Qc kW	EER kW/kW	q l/s	Δp kPa
512	5	497	5.54	24	25	480	4.94	23	24	463	4.38	22	22	445	3.86	21	21	426	3.38	20	19	407	2.95	19	18
562		554	5.59	26	30	535	4.98	26	29	515	4.41	25	27	495	3.88	24	25	474	3.40	23	23	452	2.95	22	21
712		697	5.44	33	29	676	4.88	32	28	654	4.33	31	26	630	3.82	30	24	603	3.34	29	22	576	2.91	27	21
812		751	5.27	36	33	728	4.73	35	31	704	4.20	34	29	678	3.70	32	27	651	3.24	31	25	622	2.81	30	23
862		855	5.65	41	40	793	4.97	38	35	775	4.44	37	33	780	4.01	37	34	749	3.51	36	31	716	3.05	34	29
1012		989	5.41	47	43	954	4.82	46	40	919	4.27	44	37	883	3.77	42	35	845	3.30	40	32	807	2.88	39	29
1162		1152	5.67	55	58	1111	5.06	53	54	1068	4.48	51	50	1025	3.95	49	46	980	3.46	47	42	933	3.01	45	39
1312		1265	5.57	60	34	1225	4.98	58	32	1182	4.41	56	30	1136	3.89	54	27	1089	3.40	52	25	1038	2.96	50	23
1462		1405	5.43	67	42	1362	4.86	65	39	1315	4.31	63	37	1265	3.80	60	34	1211	3.33	58	31	1153	2.89	55	28
1612		1572	5.59	75	50	1525	5.02	73	47	1474	4.46	70	44	1420	3.93	68	41	1363	3.44	65	38	1302	2.99	62	35
1762		1740	5.78	83	61	1611	5.08	77	52	1563	4.53	75	49	1566	4.08	75	49	1527	3.60	73	47	1459	3.13	70	43
512	7	531	5.76	25	28	513	5.15	24	26	494	4.56	24	25	474	4.02	23	23	454	3.53	22	21	433	3.08	21	19
562		592	5.80	28	34	571	5.18	27	32	549	4.59	26	30	528	4.04	25	28	505	3.54	24	25	481	3.08	23	23
712		741	5.63	35	32	720	5.05	34	30	696	4.49	33	29	670	3.97	32	27	643	3.48	31	25	614	3.04	29	23
812		798	5.44	38	36	774	4.89	37	35	749	4.35	36	32	721	3.84	34	30	693	3.36	33	28	662	2.93	32	26
862		908	5.82	43	44	834	5.11	40	38	799	4.52	38	35	814	4.11	39	36	796	3.64	38	35	761	3.17	36	32
1012		1057	5.62	51	48	1019	5.02	49	45	981	4.45	47	42	942	3.93	45	39	902	3.45	43	36	860	3.01	41	32
1162		1232	5.87	59	65	1186	5.25	57	60	1141	4.66	55	56	1094	4.11	52	52	1045	3.60	50	47	994	3.13	48	43
1312		1349	5.77	65	38	1305	5.16	62	36	1260	4.59	60	33	1211	4.05	58	31	1160	3.55	55	28	1107	3.09	53	26
1462		1495	5.61	71	47	1450	5.03	69	44	1400	4.47	67	41	1347	3.95	64	38	1290	3.46	62	35	1230	3.02	59	32
1612		1672	5.77	80	56	1622	5.19	78	52	1568	4.62	75	49	1510	4.07	72	46	1449	3.57	69	42	1385	3.11	66	39
1762		1849	5.96	89	67	1702	5.24	81	57	1630	4.64	78	53	1628	4.18	78	53	1623	3.74	78	52	1552	3.25	74	48
512	10	586	6.08	28	33	564	5.45	27	31	543	4.84	26	29	521	4.27	25	27	499	3.75	24	25	475	3.27	23	23
562		652	6.11	31	40	628	5.47	30	37	604	4.86	29	35	580	4.28	28	32	554	3.76	27	30	528	3.27	25	27
712		811	5.88	39	37	787	5.29	38	35	761	4.72	36	33	733	4.18	35	31	704	3.68	34	29	673	3.22	32	27
812		872	5.68	42	42	846	5.11	41	40	818	4.56	39	38	788	4.03	38	35	757	3.54	36	33	724	3.10	35	30
862		991	6.07	47	51	893	5.29	43	42	850	4.68	41	38	867	4.26	42	40	868	3.82	42	40	830	3.33	40	37
1012		1165	5.93	56	58	1123	5.31	54	54	1080	4.72	52	50	1036	4.17	50	46	991	3.67	47	42	943	3.20	45	38
1162		1358	6.16	65	77	1307	5.52	63	72	1255	4.91	60	66	1202	4.34	58	61	1147	3.81	55	56	1091	3.32	52	51
1312		1481	6.06	71	46	1432	5.43	69	43	1381	4.84	66	40	1328	4.28	64	37	1272	3.76	61	34	1214	3.28	58	31
1462		1634	5.86	78	55	1585	5.27	76	52	1532	4.70	73	49	1475	4.16	71	45	1413	3.66	68	41	1348	3.20	65	37
1612		1826	6.02	88	65	1771	5.42	85	61	1713	4.84	82	57	1650	4.28	79	53	1583	3.76	76	49	1513	3.29	72	45
1762		2021	6.21	97	78	1855	5.48	89	67	1743	4.82	84	59	1737	4.33	83	59	1758	3.91	84	60	1694	3.43	81	56
512	15	668	6.52	32	41	642	5.84	31	38	616	5.21	30	35	589	4.60	28	33	562	4.04	27	30	534	3.53	26	27
562		752	6.55	36	51	721	5.88	35	47	692	5.23	33	43	661	4.63	32	40	630	4.06	30	37	598	3.53	29	33
712		932	6.26	45	47	905	5.65	43	44	875	5.06	42	42	844	4.50	41	39	810	3.98	39	36	775	3.50	37	33
812		1004	6.05	48	53	973	5.46	47	50	940	4.88	45	47	906	4.33	44	44	869	3.82	42	41	831	3.34	40	38
862		1039	6.22	50	54	1055	5.73	51	55	962	4.99	46	47	956	4.49	46	46	947	4.01	45	46	905	3.50	43	42
1012		1316	6.30	63	71	1264	5.66	61	66	1213	5.05	58	61	1161	4.47	56	56	1108	3.93	53	51	1054	3.43	51	46
1162		1528	6.50	74	95	1465	5.85	71	87	1404	5.21	68	80	1342	4.61	65	74	1279	4.05	61	67	1214	3.54	58	61
1312		1721	6.49	83	61	1661	5.85	80	56	1601	5.23	77	52	1538	4.64	74	48	1473	4.09	71	44	1405	3.59	67	40
1462		1881	6.22	90	72	1824	5.62	88	67	1763	5.03	85	63	1698	4.48	82	58	1629	3.96	78	54	1556	3.48	75	49
1612		2103	6.39	101	83	2037	5.77	98	78	1967	5.17	95	73	1895	4.60	91	68	1819	4.06	87	63	1739	3.56	84	57
1762		2170	6.41	104	88	2110	5.81	102	83	1999	5.16	96	75	1951	4.60	94	71	1896	4.08	91	68	1813	3.57	87	62
512	18	670	6.53	32	41	644	5.86	31	38	618	5.22	30	35	591	4.62	28	32	564	4.06	27	30	536	3.54	26	27
562		755	6.57	36	50	724	5.89	35	46	694	5.25	33	43	664	4.64	32	40	632	4.07	30	36	600	3.55	29	33
712		1010	6.46	49	53	980	5.85	47	50	948	5.25	46	47	914	4.68	44	44	877	4.15	42	41	839	3.65	40	38
812		1087	6.24	52	60	1054	5.65	51	57	1018	5.06	49	54	981	4.50	47	50	941	3.98	45	46	900	3.49	43	43
862		1027	6.20	49	52	1058	5.75	51	55	1025	5.14	49	52	988	4.57	48	49	949	4.02	46	45	907	3.51	44	42
1012		1320	6.32	64	70	1268	5.68	61	65	1217	5.06	59	60	1166	4.48	56	55	1113	3.95	54	51	1058	3.45	51	46
1162		1533	6.52	74	94	1471	5.86	71	87	1410	5.23	68	80	1348	4.63	65	73	1284	4.07	62	67	1220	3.55	59	60
1312		1874	6.70	90	71	1810	6.07	87	66	1743	5.44	84	61	1673	4.84	80	56	1601	4.28	77	52	1526	3.76	73	47
1462		2035	6.39	98	83	0	-	0	0	1906	5.20	92	73	1836	4.64	88	67	1761	4.12	85	62	1682	3.63	81	56
1612		2272	6.56	109	94	0	-	0	0	2124	5.34	102	83	2043	4.76	98	77	1958	4.21	94	71	1869	3.70	90	65
1762		2177	6.42	105	87	2117	5.82	102	82	2052	5.22	99	77	1980	4.64	95	72	1902	4.09	92	67	1820	3.58	88	62

Legend
LWT Leaving water temperature, °C
Qc Cooling capacity, kW
EER Energy efficiency ratio, kW/kW
q Evaporator water flow rate, l/s
Δp Evaporator pressure drop, kPa

Application data
Standard units, refrigerant: R-134a
Evaporator and condenser entering/leaving water temperature difference: 5 K
Evaporator and condenser fluid: water
Fouling factor: 0.18 x 10^{-4} (m^2 K)/W

Performances in accordance with EN14511-3:2011.

Cooling capacities

High-efficiency 30XW-P units with option 150

		Condenser entering water temperature, °C																							
30XW-P Opt. 150	LWT °C	25				30				35				40				45				50			
		Qc kW	EER kW/kW	q l/s	Δp kPa	Qc kW	EER kW/kW	q l/s	Δp kPa	Qc kW	EER kW/kW	q l/s	Δp kPa	Qc kW	EER kW/kW	q l/s	Δp kPa	Qc kW	EER kW/kW	q l/s	Δp kPa	Qc kW	EER kW/kW	q l/s	Δp kPa
512	5	498	5.75	24	25	481	5.10	23	24	464	4.50	22	22	446	3.95	21	21	427	3.46	20	19	408	3.00	19	18
562		555	5.82	26	30	536	5.16	26	29	516	4.55	25	27	496	3.99	24	25	475	3.48	23	23	453	3.01	22	21
712		699	5.63	33	29	678	5.02	32	28	655	4.44	31	26	631	3.90	30	24	605	3.41	29	22	577	2.96	27	21
812		752	5.46	36	33	730	4.88	35	31	706	4.31	34	29	680	3.79	32	27	652	3.30	31	25	624	2.86	30	23
862		858	5.90	41	40	795	5.14	38	35	777	4.58	37	33	782	4.12	37	34	751	3.59	36	31	717	3.11	34	29
1012		992	5.61	47	43	957	4.98	46	40	921	4.39	44	37	885	3.86	42	35	848	3.37	40	32	809	2.93	39	29
1162		1157	5.95	55	58	1115	5.27	53	54	1072	4.64	51	50	1029	4.07	49	46	983	3.55	47	42	936	3.07	45	39
1312		1268	5.76	60	34	1227	5.12	58	32	1184	4.52	56	30	1139	3.97	54	27	1091	3.46	52	25	1040	3.00	50	23
1462		1409	5.64	67	42	1366	5.02	65	39	1318	4.44	63	37	1268	3.89	60	34	1213	3.39	58	31	1156	2.94	55	28
1612		1578	5.80	75	50	1530	5.19	73	47	1479	4.59	70	44	1424	4.02	68	41	1366	3.51	65	38	1305	3.04	62	35
1762		1747	6.05	83	61	1617	5.27	77	52	1569	4.67	75	49	1571	4.20	75	49	1532	3.69	73	47	1464	3.20	70	43
512	7	532	6.00	25	28	514	5.33	24	26	495	4.70	24	25	475	4.13	23	23	455	3.61	22	21	434	3.14	21	19
562		593	6.08	28	34	572	5.39	27	32	551	4.75	26	30	529	4.17	25	28	506	3.63	24	25	482	3.15	23	23
712		743	5.84	35	32	721	5.22	34	30	698	4.62	33	29	672	4.07	32	27	644	3.56	31	25	615	3.10	29	23
812		800	5.66	38	36	776	5.06	37	35	751	4.48	36	32	723	3.94	34	30	694	3.44	33	28	664	2.99	32	26
862		911	6.10	43	44	837	5.30	40	38	801	4.67	38	35	817	4.24	39	36	798	3.74	38	35	763	3.24	36	32
1012		1060	5.86	51	48	1023	5.20	49	45	984	4.59	47	42	945	4.04	45	39	904	3.53	43	36	862	3.07	41	32
1162		1237	6.20	59	65	1191	5.50	57	60	1145	4.85	55	56	1098	4.25	52	52	1049	3.71	50	47	998	3.21	48	43
1312		1353	5.99	65	38	1309	5.33	62	36	1263	4.72	60	33	1214	4.14	58	31	1163	3.62	55	28	1109	3.14	53	26
1462		1499	5.85	71	47	1454	5.22	69	44	1404	4.62	67	41	1351	4.06	64	38	1293	3.54	62	35	1233	3.08	59	32
1612		1678	6.02	80	56	1627	5.38	78	52	1573	4.77	75	49	1515	4.19	72	46	1453	3.65	69	42	1389	3.17	66	39
1762		1856	6.28	89	67	1708	5.46	81	57	1635	4.80	78	53	1633	4.31	78	53	1628	3.84	78	52	1557	3.33	74	48
512	10	587	6.38	28	33	566	5.67	27	31	544	5.01	26	29	522	4.41	25	27	500	3.85	24	25	476	3.35	23	23
562		654	6.46	31	40	630	5.73	30	37	606	5.06	29	35	581	4.44	28	32	556	3.87	27	30	529	3.36	25	27
712		813	6.14	39	37	789	5.50	38	35	763	4.88	36	33	735	4.30	35	31	706	3.77	34	29	674	3.29	32	27
812		875	5.95	42	42	849	5.32	41	40	821	4.72	39	38	791	4.16	38	35	759	3.64	36	33	726	3.17	35	30
862		994	6.42	47	51	896	5.52	43	42	853	4.85	41	38	870	4.40	42	40	870	3.94	42	40	833	3.42	40	37
1012		1170	6.23	56	58	1127	5.54	54	54	1084	4.90	52	50	1039	4.31	50	46	994	3.77	47	42	946	3.27	45	38
1162		1365	6.58	65	77	1313	5.84	63	72	1260	5.16	60	66	1207	4.52	58	61	1152	3.94	55	56	1095	3.42	52	51
1312		1486	6.34	71	46	1436	5.65	69	43	1385	5.00	66	40	1332	4.40	64	37	1275	3.85	61	34	1216	3.35	58	31
1462		1640	6.16	78	55	1590	5.51	76	52	1537	4.88	73	49	1479	4.30	71	45	1417	3.76	68	41	1352	3.28	65	37
1612		1834	6.33	88	65	1778	5.67	85	61	1719	5.03	82	57	1655	4.42	79	53	1588	3.87	76	49	1518	3.36	72	45
1762		2030	6.60	97	78	1863	5.74	89	67	1750	5.01	84	59	1744	4.49	83	59	1765	4.05	84	60	1700	3.53	81	56
512	15	670	6.92	32	41	644	6.15	31	38	617	5.44	30	35	591	4.78	28	33	563	4.18	27	30	535	3.63	26	27
562		755	7.03	36	51	724	6.24	35	47	694	5.51	33	43	663	4.83	32	40	632	4.21	30	37	600	3.65	29	33
712		936	6.61	45	47	908	5.92	43	44	878	5.27	42	42	846	4.67	41	39	813	4.11	39	36	777	3.60	37	33
812		1007	6.42	48	53	977	5.75	47	50	944	5.11	45	47	909	4.50	44	44	872	3.95	42	41	833	3.44	40	38
862		1043	6.60	50	54	1059	6.06	51	55	966	5.21	46	47	959	4.67	46	46	950	4.16	45	46	907	3.61	43	42
1012		1322	6.71	63	71	1270	5.97	61	66	1218	5.28	58	61	1166	4.65	56	56	1112	4.06	53	51	1057	3.53	51	46
1162		1537	7.05	74	95	1473	6.26	71	87	1411	5.53	68	80	1348	4.85	65	74	1284	4.23	61	67	1219	3.67	58	61
1312		1727	6.89	83	61	1668	6.16	80	56	1607	5.47	77	52	1543	4.82	74	48	1477	4.22	71	44	1409	3.68	67	40
1462		1889	6.64	90	72	1831	5.95	88	67	1770	5.29	85	63	1704	4.67	82	58	1634	4.11	78	54	1561	3.59	75	49
1612		2113	6.83	101	83	2046	6.12	98	78	1975	5.43	95	73	1903	4.80	91	68	1826	4.21	87	63	1745	3.67	84	57
1762		2181	6.87	104	88	2120	6.17	102	83	2008	5.43	96	75	1959	4.81	94	71	1904	4.24	91	68	1820	3.69	87	62
512	18	672	6.94	32	41	646	6.17	31	38	619	5.46	30	35	593	4.79	28	32	565	4.19	27	30	537	3.64	26	27
562		758	7.05	36	50	726	6.26	35	46	696	5.53	33	43	666	4.85	32	40	634	4.22	30	36	602	3.66	29	33
712		1014	6.88	49	53	984	6.18	47	50	951	5.51	46	47	917	4.88	44	44	880	4.30	42	41	841	3.76	40	38
812		1092	6.68	52	60	1058	5.99	51	57	1022	5.33	49	54	984	4.71	47	50	944	4.13	45	46	902	3.61	43	43
862		1031	6.57	49	52	1062	6.08	51	55	1028	5.41	49	52	992	4.76	48	49	952	4.17	46	45	910	3.62	44	42
1012		1326	6.73	64	70	1274	5.99	61	65	1222	5.30	59	60	1170	4.66	56	55	1117	4.08	54	51	1062	3.54	51	46
1162		1542	7.08	74	94	1479	6.29	71	87	1417	5.55	68	80	1354	4.87	65	73	1290	4.24	62	67	1225	3.68	59	60
1312		1882	7.19	90	71	1818	6.45	87	66	1750	5.73	84	61	1679	5.06	80	56	1606	4.44	77	52	1531	3.88	73	47
1462		2046	6.90	98	83	0	-	0	0	1915	5.51	92	73	1843	4.88	88	67	1767	4.29	85	62	1688	3.76	81	56
1612		2285	7.09	109	94	0	-	0	0	2134	5.66	102	83	2052	5.00	98	77	1966	4.39	94	71	1877	3.83	90	65
1762		2188	6.89	105	87	2127	6.19	102	82	2061	5.51	99	77	1989	4.86	95	72	1910	4.25	92	67	1827	3.70	88	62

Legend
LWT Leaving water temperature, °C
Qc Cooling capacity, kW
EER Energy efficiency ratio, kW/kW
q Evaporator water flow rate, l/s
Δp Evaporator pressure drop, kPa

Application data
Standard units, refrigerant: R-134a
Evaporator and condenser entering/leaving water temperature difference: 5 K
Evaporator and condenser fluid: water
Fouling factor: 0.18 x 10^{-4} (m^2 K)/W

Gross performances, not in accordance with EN14511-3:2011. These performances do not take into account the correction for the proportional heating capacity and power input generated by the water pump to overcome the internal pressure drop in the heat exchanger.

Heating capacities in accordance with EN14511-3 : 2011

High-efficiency 30XWHP units with option 150

		Evaporator entering water temperature, °C															
30XWHP	LWT	8				10				15				18			
Opt. 150	°C	Qh	COP	q	Δp	Qh	COP	q	Δp	Qh	COP	q	Δp	Qh	COP	q	Δp
		kW	kW/kW	l/s	kPa	kW	kW/kW	l/s	kPa	kW	kW/kW	l/s	kPa	kW	kW/kW	l/s	kPa
512	30	578	6.27	28	42	614	6.46	29	47	712	6.89	34	60	762	7.07	36	67
562		644	6.28	31	50	684	6.46	33	55	793	6.86	38	71	857	7.04	41	81
712		812	6.16	39	36	860	6.31	41	40	986	6.64	47	51	1066	6.80	51	58
812		879	5.98	42	41	931	6.12	45	45	1066	6.43	51	58	1152	6.59	55	67
862		992	6.30	47	49	1049	6.44	50	54	1190	6.73	57	68	1153	6.68	55	64
1012		1153	6.04	55	36	1226	6.20	59	40	1423	6.56	68	52	1506	6.68	72	57
1162		1335	6.20	64	46	1419	6.34	68	52	1650	6.62	79	67	1743	6.70	83	74
1312		1469	6.23	70	37	1559	6.39	75	41	1799	6.73	86	53	1957	6.89	94	62
1462		1638	6.07	78	44	1735	6.20	83	49	1989	6.47	95	64	2151	6.59	103	73
1612		1826	6.19	87	36	1935	6.33	93	41	2219	6.60	106	54	2401	6.72	115	64
1762		2010	6.31	96	44	2127	6.43	102	49	2442	6.67	117	66	2481	6.71	119	68
512	35	568	5.71	27	40	602	5.89	29	44	696	6.30	33	56	742	6.48	36	63
562		632	5.73	30	48	670	5.89	32	52	775	6.28	37	67	834	6.46	40	75
712		802	5.63	38	34	848	5.78	41	38	970	6.11	47	48	1048	6.27	50	55
812		868	5.48	42	39	918	5.62	44	43	1049	5.91	50	55	1133	6.07	54	63
862		948	5.72	45	44	983	5.82	47	47	1111	6.10	53	59	1223	6.30	59	70
1012		1133	5.52	54	34	1202	5.68	58	38	1391	6.03	67	49	1468	6.15	70	53
1162		1309	5.67	63	44	1390	5.81	67	49	1609	6.11	77	63	1695	6.21	81	69
1312		1446	5.69	69	35	1532	5.85	73	39	1764	6.19	85	50	1915	6.36	92	58
1462		1615	5.56	77	42	1709	5.69	82	47	1957	5.97	94	60	2115	6.10	101	70
1612		1799	5.68	86	34	1904	5.82	91	39	2181	6.10	105	51	2357	6.22	113	60
1762		1905	5.74	91	38	2007	5.86	96	43	2297	6.13	110	57	2443	6.23	117	64
512	40	558	5.18	27	38	591	5.34	28	42	681	5.74	33	53	724	5.91	35	59
562		621	5.19	30	45	658	5.35	32	50	758	5.73	36	63	812	5.90	39	71
712		790	5.12	38	32	836	5.27	40	36	955	5.58	46	46	1030	5.74	49	53
812		856	4.99	41	37	904	5.12	43	41	1032	5.40	50	52	1114	5.56	53	60
862		937	5.22	45	42	970	5.30	47	45	1072	5.53	51	54	1159	5.71	56	62
1012		1114	5.02	54	32	1180	5.17	57	36	1361	5.52	65	46	1433	5.64	69	50
1162		1284	5.17	62	42	1362	5.31	65	46	1571	5.60	75	59	1650	5.70	79	64
1312		1423	5.18	68	33	1507	5.32	72	37	1730	5.66	83	47	1875	5.83	90	55
1462		1591	5.06	76	40	1683	5.19	81	45	1924	5.48	92	57	2077	5.61	100	66
1612		1771	5.18	85	33	1874	5.31	90	37	2142	5.59	103	49	2313	5.72	111	57
1762		1882	5.24	90	37	1962	5.34	94	40	2191	5.58	105	50	2371	5.72	114	59
512	45	549	4.69	26	36	580	4.84	28	40	666	5.20	32	50	706	5.36	34	55
562		610	4.70	29	43	646	4.84	31	47	741	5.19	36	60	792	5.35	38	67
712		779	4.64	37	31	823	4.77	40	34	939	5.08	45	44	1012	5.24	49	50
812		845	4.52	41	36	892	4.64	43	39	1015	4.92	49	50	1094	5.06	53	57
862		955	4.80	46	43	999	4.90	48	47	1086	5.08	52	54	1156	5.22	56	61
1012		1096	4.56	53	31	1159	4.70	56	34	1332	5.03	64	43	1399	5.14	67	47
1162		1261	4.69	61	40	1335	4.82	64	44	1535	5.12	74	55	1608	5.21	77	60
1312		1400	4.69	67	31	1481	4.83	71	35	1696	5.15	82	45	1835	5.32	88	52
1462		1567	4.59	75	39	1656	4.72	80	43	1890	5.00	91	54	2039	5.14	98	63
1612		1744	4.69	84	31	1843	4.82	89	35	2104	5.10	101	46	2269	5.23	109	54
1762		1912	4.82	92	37	1984	4.90	95	40	2204	5.12	106	50	2347	5.24	113	57
512	50	540	4.23	26	35	570	4.37	27	38	652	4.70	31	48	688	4.84	33	52
562		600	4.24	29	41	634	4.37	31	45	725	4.69	35	57	772	4.83	37	63
712		767	4.19	37	30	810	4.32	39	33	922	4.61	44	41	994	4.76	48	47
812		833	4.08	40	34	879	4.19	42	38	999	4.45	48	48	1075	4.59	52	54
862		942	4.33	45	41	993	4.44	48	45	1128	4.70	54	57	1162	4.77	56	60
1012		1079	4.12	52	30	1139	4.25	55	32	1303	4.56	63	41	1366	4.67	66	44
1162		1238	4.25	60	38	1309	4.37	63	41	1499	4.64	72	52	1567	4.73	75	56
1312		1378	4.23	66	30	1455	4.36	70	33	1662	4.66	80	42	1796	4.83	86	49
1462		1542	4.15	74	37	1629	4.27	78	41	1855	4.54	89	52	1999	4.68	96	59
1612		1718	4.24	83	30	1813	4.35	87	33	2065	4.62	99	43	2224	4.76	107	51
1762		1910	4.38	92	37	2016	4.49	97	41	2249	4.71	108	51	2321	4.77	112	55
512	55	531	3.86	16	15	560	3.99	17	17	638	4.31	19	21	672	4.45	20	23
562		590	3.87	18	18	622	4.00	19	20	710	4.31	21	25	753	4.45	23	27
712		755	3.82	23	15	796	3.95	24	15	906	4.24	27	17	975	4.40	29	19
812		823	3.73	25	15	867	3.84	26	15	982	4.10	30	19	1056	4.26	32	22
862		928	3.96	28	17	978	4.07	30	19	1109	4.35	33	23	1141	4.42	34	25
1012		1062	3.76	32	15	1120	3.88	34	15	1276	4.18	39	17	1334	4.29	40	19
1162		1216	3.88	37	16	1283	4.00	39	18	1464	4.27	44	22	1528	4.36	46	24
1312		1356	3.86	41	15	1431	3.99	43	15	1630	4.29	49	17	1759	4.46	53	20
1462		1517	3.79	46	15	1601	3.92	48	16	1821	4.20	55	21	1960	4.34	59	24
1612		1692	3.87	51	15	1785	3.99	54	15	2028	4.27	61	16	2182	4.41	66	18
1762		1880	4.01	57	15	1983	4.13	60	15	2251	4.39	68	19	2279	4.42	69	20
512	60	524	3.48	13	15	551	3.60	13	15	625	3.90	15	15	657	4.02	16	15
562		581	3.50	14	15	612	3.61	15	15	695	3.90	17	16	735	4.02	18	18
712		743	3.45	18	15	784	3.57	19	15	890	3.85	22	15	956	4.01	23	15
812		813	3.37	20	15	855	3.48	21	15	967	3.73	23	15	1038	3.88	25	15
862		915	3.57	22	15	964	3.68	23	15	1091	3.96	26	15	1121	4.02	27	16
1012		1047	3.40	25	15	1102	3.51	27	15	1251	3.79	30	15	1304	3.88	32	15
1162		1195	3.50	29	15	1259	3.61	30	15	1432	3.87	35	15	1491	3.95	36	15
1312		1334	3.49	32	15	1407	3.61	34	15	1599	3.90	39	15	1723	4.06	42	15
1462		1492	3.43	36	15	1574	3.55	38	15	1787	3.82	43	15	1922	3.97	46	15
1612		1668	3.50	40	15	-	-	-	-	1992	3.88	48	15	2141	4.02	52	15
1762		1852	3.62	45	15	1952	3.74	47	15	2212	4.00	54	15	2238	4.03	54	15

Legend
LWT Leaving water temperature, °C
Qh Heating capacity, kW
COP Coefficient of performance, kW/kW
q Condenser water flow rate, l/s
Δp Condenser pressure drop, kPa

Application data
Standard units, refrigerant: R-134a
Evaporator entering/leaving water temperature difference: 3 K
Condenser entering/leaving water temperature difference: 5 K for LWT values <55°C, 8 K for values = 55°C, 10 K for LWT values >55°C
Evaporator and condenser fluid: water
Fouling factor: 0.18 x 10^{-4} (m^2 K)/W

Performances in accordance with EN14511-3:2011.

Heating capacities

High-efficiency 30XWHP units with option 150

		Evaporator entering water temperature, °C															
30XWHP	LWT	8				10				15				18			
Opt. 150	°C	Qh	COP	q	Δp	Qh	COP	q	Δp	Qh	COP	q	Δp	Qh	COP	q	Δp
		kW	kW/kW	l/s	kPa	kW	kW/kW	l/s	kPa	kW	kW/kW	l/s	kPa	kW	kW/kW	l/s	kPa
512	30	576	6.64	28	42	611	6.90	29	47	709	7.53	34	60	758	7.82	36	67
562		641	6.72	31	50	680	6.98	33	55	789	7.60	38	71	852	7.94	41	81
712		810	6.53	39	36	858	6.74	41	40	982	7.23	47	51	1061	7.51	51	58
812		877	6.36	42	41	927	6.57	45	45	1061	7.04	51	58	1147	7.32	55	67
862		988	6.80	47	49	1045	7.00	50	54	1184	7.50	57	68	1148	7.38	55	64
1012		1150	6.51	55	36	1222	6.76	59	40	1418	7.38	68	52	1501	7.62	72	57
1162		1331	6.85	64	46	1414	7.10	68	52	1643	7.72	79	67	1735	7.96	83	74
1312		1465	6.66	70	37	1554	6.89	75	41	1792	7.46	86	53	1948	7.79	94	62
1462		1633	6.54	78	44	1728	6.75	83	49	1980	7.26	95	64	2141	7.54	103	73
1612		1821	6.70	87	36	1928	6.92	93	41	2210	7.44	106	54	2390	7.73	115	64
1762		2004	6.95	96	44	2119	7.17	102	49	2431	7.70	117	66	2470	7.78	119	68
512	35	566	6.00	27	40	600	6.23	29	44	693	6.80	33	56	738	7.06	36	63
562		629	6.06	30	48	667	6.29	32	52	771	6.85	37	67	829	7.15	40	75
712		799	5.92	38	34	846	6.12	41	38	967	6.57	47	48	1044	6.82	50	55
812		865	5.78	42	39	914	5.97	44	43	1045	6.39	50	55	1128	6.65	54	63
862		944	6.08	45	44	980	6.21	47	47	1106	6.63	53	59	1217	6.97	59	70
1012		1130	5.88	54	34	1199	6.11	58	38	1387	6.67	67	49	1463	6.88	70	53
1162		1305	6.17	63	44	1385	6.40	67	49	1603	6.96	77	63	1687	7.17	81	69
1312		1442	6.02	69	35	1528	6.23	73	39	1757	6.75	85	50	1907	7.06	92	58
1462		1610	5.93	77	42	1703	6.12	82	47	1949	6.59	94	60	2105	6.84	101	70
1612		1793	6.08	86	34	1898	6.28	91	39	2172	6.75	105	51	2347	7.02	113	60
1762		1899	6.19	91	38	2000	6.38	96	43	2288	6.86	110	57	2432	7.08	117	64
512	40	556	5.40	27	38	589	5.60	28	42	678	6.12	33	53	720	6.35	35	59
562		618	5.45	30	45	655	5.65	32	50	754	6.16	36	63	808	6.42	39	71
712		788	5.34	38	32	833	5.52	40	36	952	5.95	46	46	1027	6.17	49	53
812		853	5.22	41	37	902	5.39	43	41	1028	5.77	50	52	1109	6.01	53	60
862		934	5.50	45	42	966	5.61	47	45	1068	5.92	51	54	1154	6.18	56	62
1012		1111	5.30	54	32	1177	5.50	57	36	1356	6.00	65	46	1428	6.19	69	50
1162		1280	5.55	62	42	1357	5.75	65	46	1565	6.25	75	59	1643	6.44	79	64
1312		1419	5.42	68	33	1502	5.62	72	37	1723	6.09	83	47	1867	6.36	90	55
1462		1586	5.34	76	40	1677	5.52	81	45	1916	5.95	92	57	2068	6.19	100	66
1612		1766	5.48	85	33	1868	5.66	90	37	2134	6.10	103	49	2303	6.34	111	57
1762		1876	5.59	90	37	1956	5.73	94	40	2184	6.10	105	50	2362	6.36	114	59
512	45	547	4.85	26	36	578	5.03	28	40	664	5.49	32	50	703	5.69	34	55
562		608	4.89	29	43	643	5.07	31	47	738	5.52	36	60	788	5.74	38	67
712		777	4.81	37	31	821	4.97	40	34	936	5.36	45	44	1009	5.57	49	50
812		842	4.69	41	36	889	4.84	43	39	1011	5.20	49	50	1090	5.40	53	57
862		952	5.03	46	43	995	5.16	48	47	1081	5.40	52	54	1151	5.59	56	61
1012		1093	4.76	53	31	1156	4.94	56	34	1327	5.39	64	43	1394	5.56	67	47
1162		1257	4.98	61	40	1331	5.16	64	44	1529	5.60	74	55	1601	5.76	77	60
1312		1396	4.87	67	31	1476	5.04	71	35	1690	5.47	82	45	1828	5.72	88	52
1462		1562	4.80	75	39	1650	4.96	80	43	1882	5.35	91	54	2029	5.57	98	63
1612		1739	4.92	84	31	1837	5.08	89	35	2096	5.48	101	46	2259	5.70	109	54
1762		1907	5.10	92	37	1978	5.22	95	40	2196	5.54	106	50	2338	5.73	113	57
512	50	538	4.36	26	35	568	4.51	27	38	649	4.91	31	48	685	5.08	33	52
562		598	4.38	29	41	631	4.54	31	45	722	4.93	35	57	768	5.11	37	63
712		765	4.31	37	30	808	4.46	39	33	920	4.82	44	41	990	5.01	48	47
812		831	4.21	40	34	876	4.34	42	38	995	4.67	48	48	1070	4.85	52	54
862		939	4.50	45	41	990	4.64	48	45	1123	4.98	54	57	1157	5.07	56	60
1012		1076	4.28	52	30	1136	4.44	55	32	1299	4.83	63	41	1362	4.97	66	44
1162		1235	4.46	60	38	1305	4.61	63	41	1493	5.00	72	52	1561	5.13	75	56
1312		1374	4.37	66	30	1451	4.52	70	33	1657	4.90	80	42	1790	5.12	86	49
1462		1537	4.30	74	37	1623	4.45	78	41	1848	4.80	89	52	1990	5.01	96	59
1612		1712	4.40	83	30	1807	4.55	87	33	2057	4.91	99	43	2215	5.11	107	51
1762		1904	4.60	92	37	2009	4.75	97	41	2240	5.06	108	51	2312	5.15	112	55
512	55	530	3.93	16	15	559	4.08	17	17	637	4.44	19	21	671	4.59	20	23
562		589	3.96	18	18	621	4.10	19	20	708	4.46	21	25	751	4.63	23	27
712		754	3.90	23	15	796	4.04	24	15	905	4.37	27	17	974	4.56	29	19
812		822	3.81	25	15	865	3.94	26	15	981	4.24	30	19	1054	4.42	32	22
862		926	4.06	28	17	976	4.20	30	19	1107	4.53	33	23	1139	4.61	34	25
1012		1061	3.86	32	15	1119	4.00	34	15	1275	4.36	39	17	1333	4.49	40	19
1162		1214	4.01	37	16	1281	4.16	39	18	1462	4.51	44	22	1526	4.63	46	24
1312		1353	3.95	41	15	1429	4.09	43	15	1628	4.45	49	17	1756	4.66	53	20
1462		1514	3.89	46	15	1598	4.03	48	16	1817	4.37	55	21	1956	4.56	59	24
1612		1689	3.98	51	15	1781	4.12	54	15	2024	4.46	61	16	2178	4.65	66	18
1762		1878	4.16	57	15	1981	4.30	60	15	2248	4.64	68	19	2275	4.68	69	20
512	60	523	3.54	13	15	550	3.66	13	15	624	3.99	15	15	656	4.12	16	15
562		580	3.56	14	15	611	3.68	15	15	694	4.00	17	16	734	4.14	18	18
712		742	3.51	18	15	783	3.64	19	15	889	3.95	22	15	956	4.12	23	15
812		812	3.43	20	15	855	3.54	21	15	966	3.83	23	15	1037	4.00	25	15
862		914	3.65	22	15	962	3.77	23	15	1090	4.08	26	15	1119	4.15	27	16
1012		1046	3.47	25	15	1101	3.59	27	15	1250	3.91	30	15	1303	4.02	32	15
1162		1194	3.59	29	15	1258	3.72	30	15	1430	4.04	35	15	1489	4.14	36	15
1312		1332	3.55	32	15	1405	3.68	34	15	1597	4.01	39	15	1721	4.20	42	15
1462		1490	3.50	36	15	1571	3.63	38	15	1784	3.94	43	15	1919	4.12	46	15
1612		1665	3.58	40	15	-	-	-	-	1989	4.01	48	15	2137	4.19	52	15
1762		1849	3.73	45	15	1950	3.86	47	15	2210	4.18	54	15	2235	4.21	54	15

Legend
LWT Leaving water temperature, °C
Qh Heating capacity, kW
COP Coefficient of performance, kW/kW
q Condenser water flow rate, l/s
Δp Condenser pressure drop, kPa

Application data
Standard units, refrigerant: R-134a
Evaporator entering/leaving water temperature difference: 3 K
Condenser entering/leaving water temperature difference: 5 K for LWT values <55°C, 8 K for values = 55°C, 10 K for LWT values >55°C
Evaporator and condenser fluid: water
Fouling factor:0.18 x 10^{-4} (m^2 K)/W

Gross performances, not in accordance with EN14511-3:2011. These performances do not take into account the correction for the proportional heating capacity and power input generated by the water pump to overcome the internal pressure drop in the heat exchanger.

Order No.13457-20, 12.2012. Supersedes order No. 13457-20, 05.2011.
Manufacturer reserves the right to change any product specifications without notice.
The cover photo is solely for illustration purposes and not contractually binding.

Manufactured by: Carrier SCS, Montluel, France.
Printed in the European Union.